CRISTEC
on-board energy

2025

www.cristec.fr

NEW PRODUCTS 2025

AC-DC BATTERY CHARGERS

YPOWER+

IP65 YPOWER+

DC-DC CONVERTER-CHARGERS

DCPOWER+

DC-AC INVERTERS

KERSINE+

SHORE-POWER DISTRIBUTION - CHARGERS

UEPOWER+

ELECTRONIC BATTERY ISOLATORS & RELAYS

RCE+

RCB+

FREQUENCY CONVERTERS

FREQ

GMDSS CHARGERS

SAFEPOWER

Repairability Made in France BV certified

www.cristec.fr

Photos de couvertures : Angatec - Nautitec/www.jfromero.fr - Pogo 44/Jakez 2020
EKREM SERIF EGELI - IVECO/Mailfait Stevenin Nicolas - Gay électricité

CRISTEC on-board energy

The CRISTEC expertise

For over 40 years CRISTEC has designed, developed and manufactured on-board electrical equipment for use with batteries.

CRISTEC is an independent and innovative electric systems manufacturer for use in harsh and confined environments.

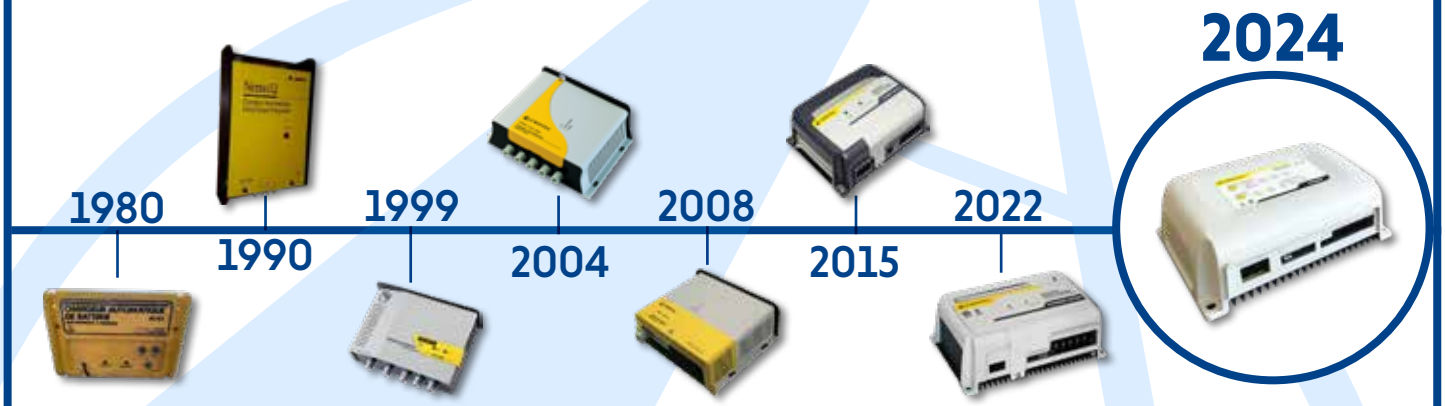

Historical supplier to the leading world class boat-builders, our strength lies in our capacity to listen and react.

BRONZE 2023 ecovadis Sustainability Rating

We produce high-end silent and connected products in France which is a guarantee of reliability and a major advantage for all our customers.

Thanks to our network of agents and distributors who are present in over 50 countries we can guarantee our clients reliable universal solutions for use in extreme environmental conditions.

YOU ARE :

OEM, shipyard, boat-builder, electrician, dealer, distributor or experienced sailor ?

You need to design a robust electrical power system ?

SO, PLEASE CONTACT US !

We are offering you **FREE** design and advice to make your dream become a reality.

Tel : +33 298 538 082 **Mail : info@cristec.fr**

CRISTEC 23 ZA Penn ar Roz 29150 Châteaulin - FRANCE / www.cristec.fr

A complete range designed for all types of systems

Our mission : through our know-how and skills, we bring value to all our current and future customers to help them to anticipate their needs.

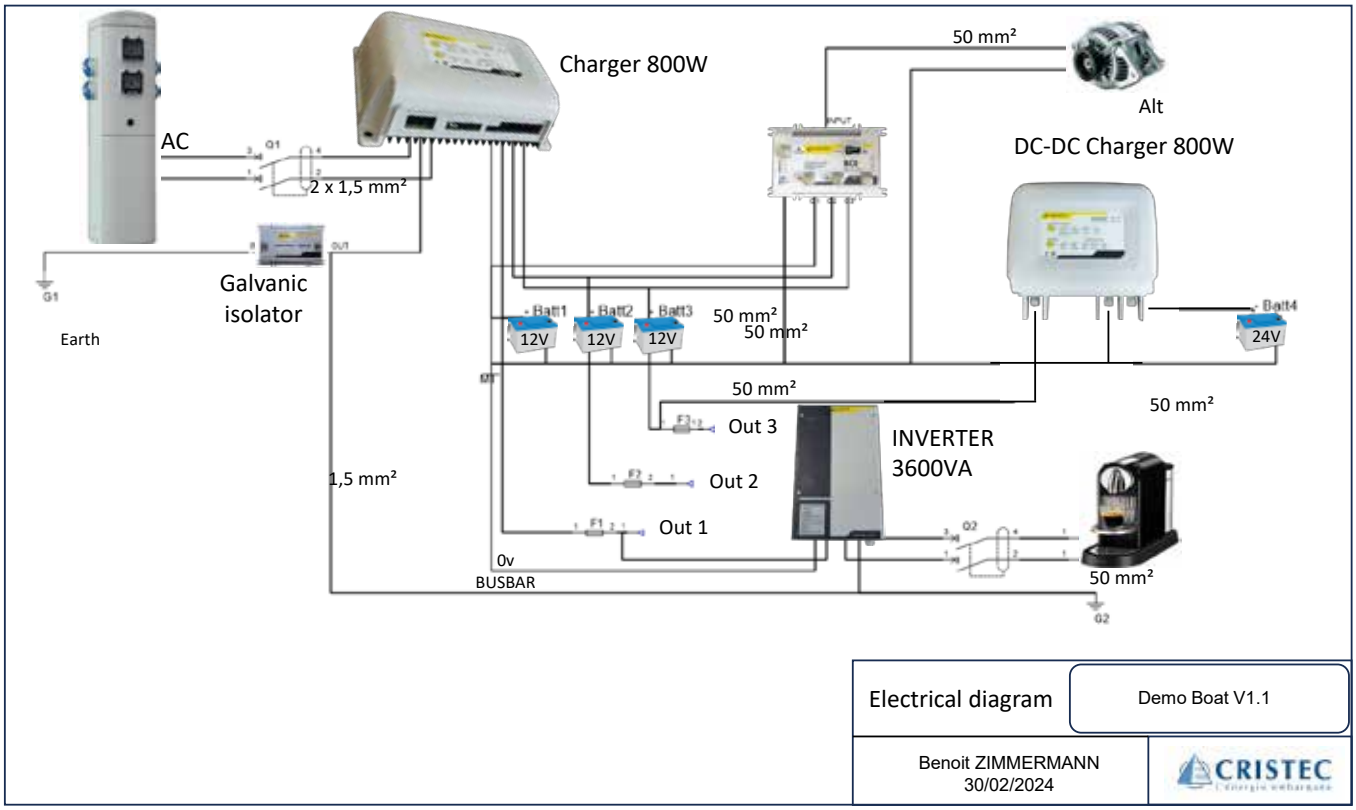

Foutaine Pajot AURA 51 © Jean-Marie LIOT

AC-DC battery chargers

YPOWER+

IP65 YPOWER+

HPOWER
& Certified HPOWER

Silent

Up to 4 outputs

Bluetooth

>60°C
No derating

Lithium ready

CAN-BUS interface

Plug & Play

YPOWER+

Warranty 3 years

8.9/10 Repairability index

Silent operating

CRISTEC is the only manufacturer offering chargers up to 12V 60A with natural convection (without fan). This advantage gives the YPOWER+ chargers a completely silent operation and an optimized lifespan. It is therefore possible to install them anywhere on board, including under a berth.

3 or 4 independent outputs depending of models

The YPOWER+ chargers are the only chargers which have up to 4 independent and non-limited outputs.

Low energy bluetooth

The YPOWER+ chargers are equipped with a Bluetooth Low Energy (BLE), variant of "classic" Bluetooth. The major advantage of BLE is its low power consumption as it consumes half the power of a classic Bluetooth.

No derating

Chargers have full charge up to +40°C for entry models and +60°C (140°F) for others with no loss.

Ignition protected

All models can be installed in the engine room thanks to **ISO8846/SAE J1171** compliance which protects against ignition of flammable gases.

Worldwide use

Automatic detection of the power supply network, from 90 to 265VAC and from 47 to 65Hz. You do not have to care about the AC power grid or genset voltage.

5-stage charging profile

- **Boost**: charges batteries to 80% of full charge
- **Absorption**: slowly completes remaining charge to 100%
- **Floating**: maintains battery charge
- **Automatic refresh**: prevents sulphation and revitalizes batteries, selectable by keypad pushbutton
- **Reboost**: new automatic Boost phase if DC consumers and the state of batteries so require.

A regulated DC power-supply mode is also available and YPOWER+ chargers can also be used as high-voltage DC-DC converters with input ranging from 121 to 375VDC.

Easy connection

Plug & Play connection, secure, simple and fast without opening the charger. AC and DC connectors are included.

Adaptative charging

Custom-made and simultaneous recharge of 3 or 4 battery banks.
YPOWER+ chargers can be connected to various types of batteries simultanously:
- Opened classic lead
- Sealed, gel or AGM
- Spiral sealed

Lithium Iron Phosphate (LiFePO4) with BMS. Selection of your technology of battery is easy thanks to the front keypad.

Remote control

NMEA

The chargers are fitted with a CAN-Bus and a Bluetooth interface as standard.
Connection to an NMEA network is also available through an optional adaptor, refer to charger's options page.

AC-DC BATTERY CHARGERS YPOWER+

12V

Part Number *	YPO12-20STPL	YPO12-30STPL	YPO12-40STPL	YPO12-60STPL
Model	12V/20A	12V/30A	12V-40A	12V-60A
Recommended battery bank**	100-200Ah	200-300Ah	300-500Ah	500-700Ah
Input				
AC Voltage	From 90 to 265VAC single-phase automatic			
DC Voltage	From 121 to 375VDC			
Frequency	From 47 to 65Hz automatic			
Current consumed 230/115VAC	1.3/2.6A	2/4A	2.7/5.6A	4.4/8.7A
Recommended power for a generator	450W	650W	700W	1050W
Power factor	1			
Efficiency	92.8% in 230VAC & 91% in 115VAC			
Input fuse	T6.3A/250V		T15A/250V	
Output				
Number of battery banks	3 separate positive terminals: +BAT E, +BAT 1 and +BAT 2 (integrated MOSFET splitter) 1 negative terminal : -BAT Each bank can be used individually and delivers the rated current		4 separate positive terminals : +BAT E, +BAT 1, +BAT 2 and +BAT 3 (integrated MOSFET splitter) 1 negative terminal : -BAT Each bank can be used individually and delivers the rated current	
Nominal current (+/-7%) @ rated power	20A/276W	30A/356W	40A/570W	60A/855W
Charging curve	Charging curve selection by push-button, Bluetooth or CAN-Bus (Boost, Absorption, Floating and Refresh)			
Battery type	Sealed lead, Gel, AGM as factory setting - calcium lead, LiFePO4, DC power-supply mode, etc. Specific request on demand			
Boost voltage for sealed lead battery (factory setting)	14.4VDC			
Floating voltage for sealed lead battery (factory setting)	13.8VDC			
Peak to peak ripple and noise	< 2% (at rated conditions)			
Automotive fuses mounted in series in minus pole -BAT	1 x 30A/32V	2 x 30A/32V	3 x 30A/32V	4 x 30A/32V
Environment				
Cooling	Natural (fanless)			
Sound level	0 dB			
Operating T° at 230VAC	From -20°C to +60°C (-4°F to +140°F)			
Derating (rated charge)	from 40°C (140°F)	from 40°C (104°F)	from 60°C (140°F)	from 60°C (140°F)
Storage T°	From -20°C to +70°C (-4°F to +158°F)			
Relative humidity	up to 70% (95% without condensation)			
Bluetooth	Low energy bluetooth (BLE) - Power: +9dBm (frequency: 2412-2484MHz)			
Casing				
Material	Aluminium sink frame and clasp / Thermoplastic body			
Dimensions (length, height, depth)	238 x 181 x 81mm (9.4 x 7.1 x 3.2 in)		289 x 197 x 105mm (11.4 x 7.8 x 4.1 in)	
Weight	2kg (4.4 lb)		3.5kg (6.6 lb)	3.7kg (6.7 lb)
Fixing center distance	219 x 155mm (8.6 x 6.1 in)		272 x 170mm (10.7 x 6.7 in)	
Fixing screw (wall)	4 M5 round head screws			
Protection factor	IP34 (electronic) & IP22 (connections)		IP22	
Electronic card protection	Sealed casing		Water-repellent varnish (marine environment)	
Standards				
CE declaration of conformity	Available on request			
CE / EMC	EN61204-3			
CE / Security	EN60335-2-29, ISO8846/SAE J1171			
Protections				
Against transient input overvoltage by varistor (Not covered by warranty) / Against output polarity reversal by removable fuses / Against short-circuits and output overloads / Against abnormal overheating				
Communication				
CAN-Bus / Bluetooth				
Options				
Temperature probe & OTD probe (Over Temperature Device) ref: 2.8m: STP-UNI-2.8 / 5m: STP-UNI-5.0				

*Included AC and DC connectors for item codes containing «ST» = STandard (except item codes containing «OE» – Original Equipment)

** Overall battery capacity recommended for lead-type batteries, C/10. For Lithium batteries, C/3, consult us if needed.

AC-DC BATTERY CHARGERS YPOWER

24V

Part Number*	YPO24-12	YPO24-20	YPO24-30
Model	24V/12A	24V-20A	24V-30A
Recommended battery bank**	100-200Ah	200-300Ah	300-500Ah
Input			
AC Voltage	From 90 to 265VAC single-phase automatic		
DC Voltage	From 121 to 375VDC		
Frequency	From 47 to 65Hz automatic		
Current consumed 230/115VAC	1,7/3,4A	2.9/5.9A	4,5/8,8A
Recommended power for a generator	420W	700W	1050W
Power factor	1		
Efficiency	92.8% in 230VAC & 91% in 115VAC		
Input fuse	T6.3A/250V	T15A/250V	
Output			
Number of battery banks	3 (including one for the engine battery) : +BAT E, +BAT 1 et +BAT 2 (integrated Mosfet splitter) Each bank can be used individually and deliver the rated current		
Nominal current (+/-7%) @ rated power	12A/342W	20A/570W	30A/855W
Charging curve	IU or IUoU through internal dip switches (Boost, Absorption and Floating – factory setting) - Selectable automatic Refresh		
Battery type	Sealed lead as factory setting - Gel, AGM, calcium lead, LiFePO4, DC power-supply mode, etc. Specific request on demand		
Boost voltage for sealed lead battery (factory setting)	28.8VDC		
Floating voltage for sealed lead battery (factory setting)	27.6VDC		
Peak to peak ripple and noise	< 2% (at rated conditions)		
Automotive fuses mounted in series in minus pole -BAT	1 x 30A/32V	2 x 30A/32V	3 x 30A/32V
Environment			
Cooling	Natural (fanless)		
Sound level	0 dB		< 50dBa à 1m
Operating T° at 230VAC	From -20°C to +60°C (-4°F to +140°F)		
Derating	from 40°C (104°F)	from 60°C (140°F)	from 60°C (140°F)
Storage T°	From -20°C to +70°C (-4°F to +158°F)		
Relative humidity	up to 70% (95% without condensation)		
Casing			
Material	Casing comprises 3 parts : Aluminium sink frame / Thermoplastic body / Aluminium clasp		
Dimensions (length, height, depth)	236 x 180 x 96 mm (9.2 x 7.1 x 3.7 in)	289 x 195 x 106mm (11.4 x 7.8 x 4.1 in)	
Weight	2.1kg (4.4 lb)	3.5kg (6.7 lb)	
Fixing center distance	219 x 155mm (8.6 x 6.1 in)	272 x 170mm (10.7 x 6.7 in)	
Fixing screw (wall)	4 M5 round head screws		
Protection factor	IP22		
Standards			
CE / EMC	EN61204-3		
CE / Security	EN60335-2-29 - ISO8846/SAE J1171		
Protections			
Against transient input overvoltage by varistor (Not covered by warranty) / Against output polarity reversal by fuses / Against short-circuits and output overloads / Against abnormal overheating			
Communication			
	CAN-Bus / Bluetooth		-
Options			
	Temperature probe & OTD probe (Over Temperature Device) ref: 2.8m: STP-UNI-2.8 / 5m: STP-UNI-5.0		

* Included AC and DC connectors for item codes containing «ST» = STandard (except item codes containing «OE» – Original Equipment)
** Overall battery capacity recommended for lead-type batteries, C/10. For Lithium batteries, C/3, consult us if needed.

AC-DC BATTERY CHARGERS YPOWER+

36V
48V

Part Number*	YPO36-20STPL	YPO48-15STPL
Model	36V/20A	48V-15A
Recommended battery bank**	100-200Ah	
Input		
AC Voltage	From 90 to 265VAC single-phase automatic	
DC Voltage	From 121 to 375VDC	
Frequency	From 47 to 65Hz automatic	
Current consumed 230/115VAC	4,4/8,7A	
Recommended power for a generator	650W	
Power factor	1	
Efficiency	92.8% in 230VAC & 91% in 115VAC	
Input fuse	T15A/250V	
Output		
Number of battery banks	4 (including one for the engine battery) : +BAT E, +BAT 1 et +BAT 2 (integrated Mosfet splitter) +BAT3 Each bank can be used individually and deliver the rated current	
Nominal current (+/-7%) @ rated power	20A/855W	15A/855W
Charging curve	IU or IUoU through internal dip switches (Boost, Absorption and Floating – factory setting) - Selectable automatic Refresh	
Battery type	Sealed lead as factory setting - Gel, AGM, calcium lead, LiFePO4, DC power-supply mode, etc. Specific request on demand	
Boost voltage for sealed lead battery (factory setting)	43,2VDC	57,6VDC
Floating voltage for sealed lead battery (factory setting)	41,4VDC	55,2VDC
Peak to peak ripple and noise	< 2% (at rated conditions)	
Automotive fuses mounted in series in minus pole -BAT	1 x 30A/80V	
Environment		
Cooling	Natural (fanless)	
Sound level	0 dB	
Operating T° at 230VAC	From -20°C to +60°C (-4°F to +140°F)	
Derating	from 40°C (104°F)	
Storage T°	From -20°C to +70°C (-4°F to +158°F)	
Relative humidity	up to 70% (95% without condensation)	
Casing		
Material	Casing comprises 3 parts : Aluminium sink frame / Thermoplastic body / Aluminium clasp	
Dimensions (length, height, depth)	289 x 195 x 106mm (11.4 x 7.8 x 4.1 in)	
Weight	3.5kg (6.7 lb)	
Fixing center distance	272 x 170mm (10.7 x 6.7 in)	
Fixing screw (wall)	4 M5 round head screws	
Protection factor	IP34 (electronic) & IP22 (connections)	
Standards		
CE / EMC	EN61204-3	
CE / Security	EN60335-2-29 - ISO8846/SAE J1171	
Protections		
Against transient input overvoltage by varistor (Not covered by warranty) / Against output polarity reversal by fuses / Against short-circuits and output overloads / Against abnormal overheating		
Communication		
CAN-Bus / Bluetooth		
Options		
Temperature probe & OTD probe (Over Temperature Device) ref: 2.8m: STP-UNI-2.8 / 5m: STP-UNI-5.0		

* Included AC and DC connectors for item codes containing «ST» = STandard (except item codes containing «OE» – Original Equipment)
** Overall battery capacity recommended for lead-type batteries, C/10. For Lithium batteries, C/3, consult us if needed.

IP65 POWER+

Warranty 3 years

8.9/10 Repairability index

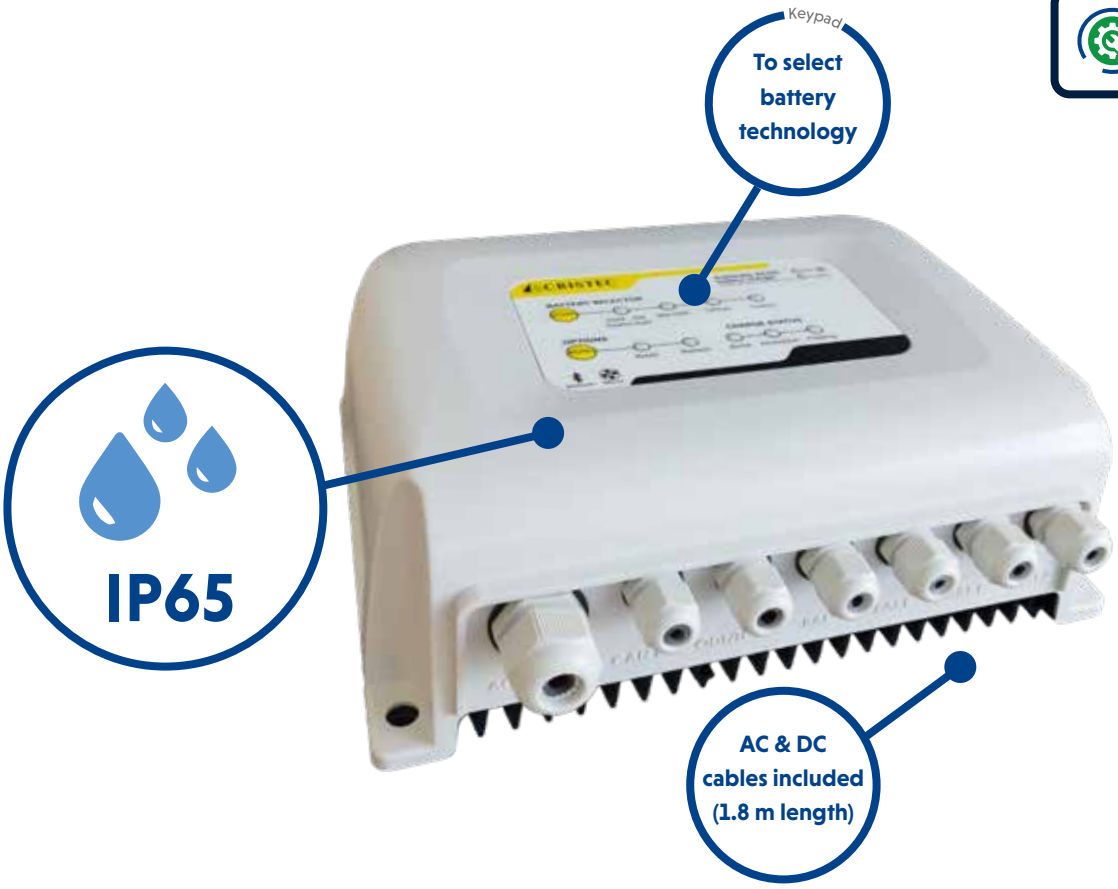

Bluetooth

Silent operating

CRISTEC is the only manufacturer offering 12V/20 and 30A chargers with natural convection (without fan) and waterproof. This advantage gives the YPOWER+ chargers a completely silent operation and an optimized lifespan. It is therefore possible to install them anywhere on board, including severe environement.

2 or 3 independent outputs

The YPOWER+ chargers have 2 or 3 independent outputs.

Low energy bluetooth

YPOWER+ chargers are equipped with a Bluetooth Low Energy (BLE), variant of "classic" Bluetooth. The major advantage of BLE is its low power consumption as it consumes half of a classic Bluetooth.

No derating

Chargers have full charge up to +40°C

Ignition protected

They can be installed in the engine room thanks to **ISO8846/SAE J1171** compliance which protects against ignition of flammable gases.

Worldwide use

Automatic detection of power supply network, from 90 to 265VAC and from 47 to 65Hz. You do not have to care about AC grid voltage.

5-stage charging profile

- **Boost**: charges batteries to 80% of full charge
- **Absorption**: slowly completes remaining charge to 100%
- **Floating**: maintains battery charge
- **Automatic refresh**: prevents sulphation and revitalizes batteries, selectable by internal pushbutton
- **Reboost**: new automatic Boost phase if DC consumers and the state of batteries so require.

A regulated DC power-supply mode is also available and IP65 POWER+ chargers can also be used as high-voltage DC-DC converters with input ranging from 121 to 375VDC.

Adaptative charging

Custom-made and simultaneous recharge of 3 independant battery banks.
YPOWER+ chargers can be used with various types of batteries simultanously:
- Opened classic lead
- Sealed, gel or AGM
- Spiral sealed

Lithium Iron Phosphate (LiFePO4) with BMS
Selection of your technology of battery thanks to the front keypad.

Remote control

NMEA

The chargers are fitted with a Bluetooth interface as standard. Can-Bus interface can be provided as option (please contact us).
Connection to an NMEA network is also available through an optional adaptor, refer to charger's options page.

AC-DC BATTERY CHARGERS IP65 POWER+

12V
24V

Part Number	YPO12-20STPL-IP	YPO12-30STPL-IP	YPO24-15STPL-IP[1]
Model	12V/20A	12V/30A	24V/15A
Recommended battery bank**	100-200Ah	200-300Ah	100-200Ah
Input			
AC Voltage	From 90 to 265VAC single-phase automatic		
DC Voltage	From 121 to 375VDC		
Frequency	From 47 to 65Hz automatic		
Current consumed 230/115VAC	1.3/2.6A	2/4A	2/4A
Recommended power for a generator	450W	650W	650W
Power factor	1		
Efficiency	92.8% in 230VAC & 91% in 115VAC		
Input fuse	T6.3A/250V		T6.3A/250V
Output			
Number of battery banks	2	3	2
	Each bank can be used individually and delivers the rated current		
Nominal current (+/-7%) @ rated power	20A/276W	30A/414W	15A/414W
Charging curve	Charging curve selection by push-button, Bluetooth or CAN-Bus (Boost, Absorption, Floating and Refresh)		
Battery type	Sealed lead as factory setting - Gel, AGM, calcium lead, LiFePO4, DC power-supply mode, etc. Specific request on demand		
Boost voltage for sealed lead battery (factory setting)	14.4VDC		28.8VDC
Floating voltage for sealed lead battery (factory setting)	13.8VDC		27.6VDC
Peak to peak ripple and noise	< 2% (at rated conditions)		
Automotive fuses mounted in series in minus pole -BAT	1 x 30A/32V	2 x 30A/32V	1 x 30A/32V
Environment			
Cooling	Natural (fanless)		
Sound level	0 dB		
Operating T° at 230VAC	From -20°C to +60°C (-4°F to +140°F)		
Derating	from 60°C (140°F)	from 40°C (104°F)	from 40°C (104°F)
Storage T°	From -20°C to +70°C (-4°F to +158°F)		
Bluetooth	Low energy bluetooth (BLE) - Power: +9dBm (frequency: 2412-2484MHz)		
Casing			
Material	Aluminium sink frame and clasp / Thermoplastic body		
Dimensions (length, height, depth)	238 x 181 x 81mm (9.4 x 7.1 x 3.2 in) (without cables)		
Weight	2kg (4.4 lb)		
Fixing center distance	219 x 155mm (8.6 x 6.1 in)		
Fixing screw (wall)	4 M5 round head screws		
Protection factor	IP65		
Electronic card protection	IP65 waterproof sealed casing		
Standards			
CE declaration of conformity	Available on request		
CE / EMC	EN61204-3		
CE / Security	EN60335-2-29 - ISO8846/SAE J1171		
Protections			
Against transient input overvoltage by varistor (Not covered by warranty) / Against output polarity reversal by fuses / Against short-circuits and output overloads / Against abnormal overheating			
Communication			
Bluetooth (CAN-Bus on option)			
Options			
Temperature probe & OTD probe (Over Temperature Device) ref: 2.8m: STP-UNI-2.8 / 5m: STP-UNI-5.0			

** Overall battery capacity recommended for lead-type batteries, C/10. For Lithium batteries, C/3, consult us if needed.

[1] Planned availability : 2025

AC-DC BATTERY CHARGERS YPOWER+

Typical installation

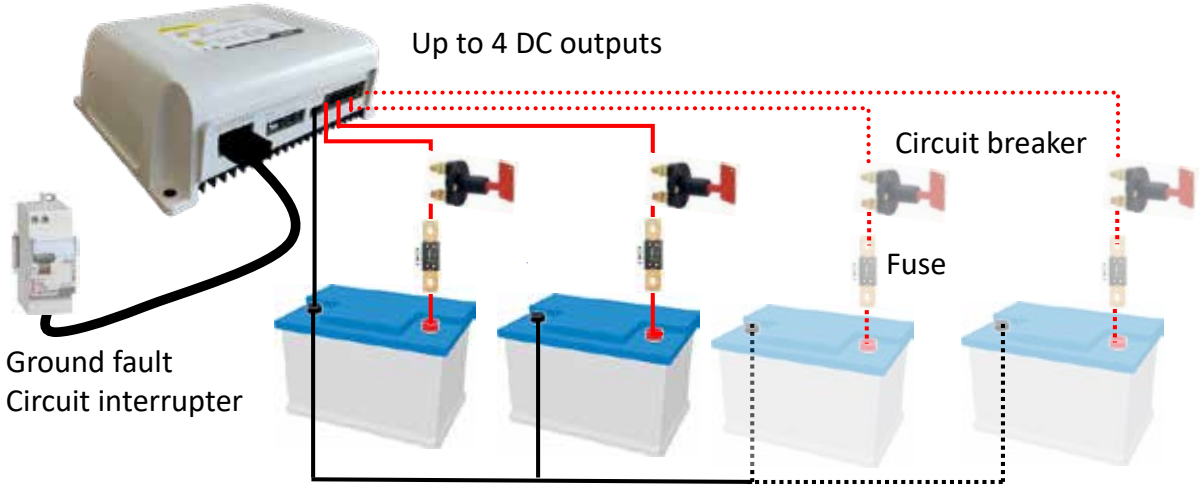

Choosing a charging curve

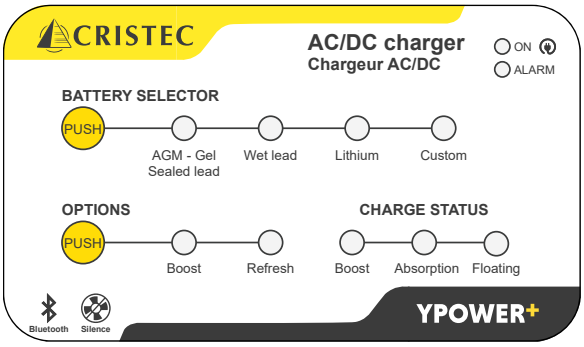

With the PUSH button of the BATTERY SELECTOR you can choose the battery technology and its associated charging curve. If you use the Bluetooth Cristec Connect application on your mobile phone or tablet and choose a different charging curve the CUSTOM led switches on.

When choosing any battery technology above, the BOOST charging curve from the OPTIONS menu is selected by default. When the PUSH button is pressed again, you select the **5-step charging curve** with BOOST and REFRESH as follows :

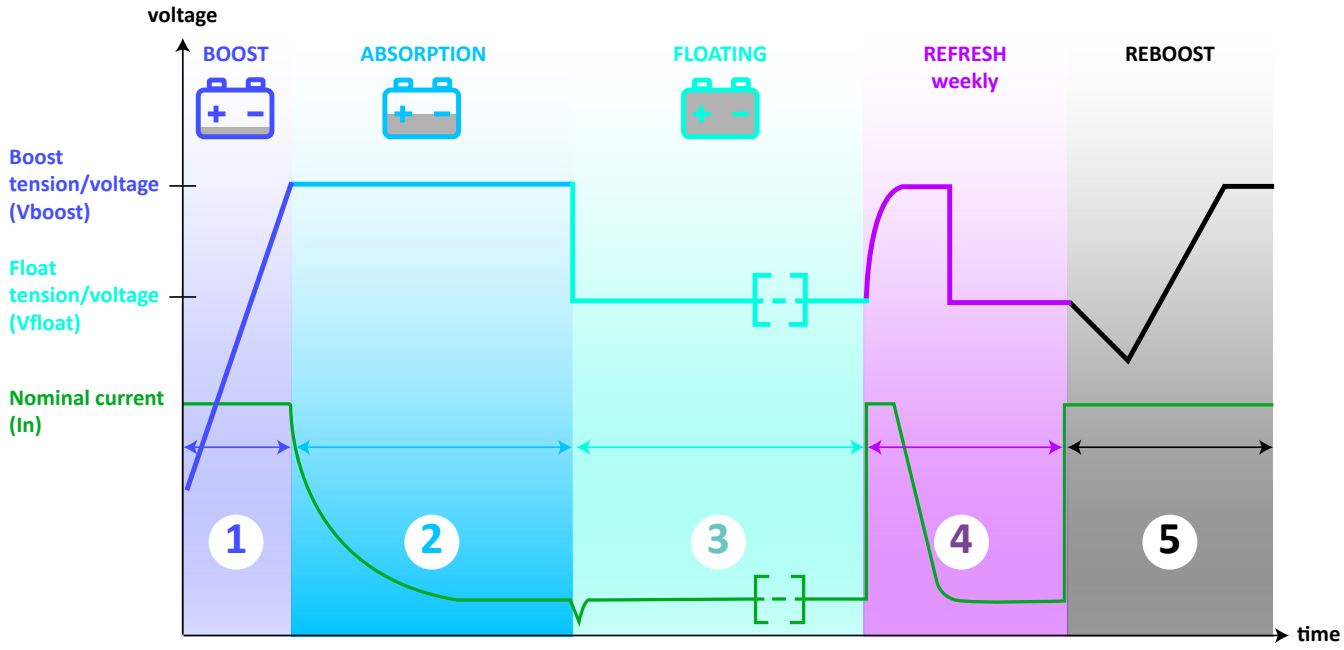

5-step charge curve IUoU with automatic weekly refresh

If no OPTIONS are selected (no green led is lit on the OPTIONS menu) the charging curve starts with the Float voltage.

HPOWER

Warranty 3 years

8.9/10 Repairability index

Rugged

HPOWER has been designed to cope with the toughest conditions for the professional and recreational industries.

3 isolated battery banks

Simultaneous recharge of 3 independent battery banks, without any current limitation.

Worldwide use

Automatic detection of power supply network, from 90 to 265VAC and from 47 to 65Hz. You do not have to care about the AC power grid and genset voltage.

Easy installation

Because of its HF technology HPOWER is very light (3 or 4 times lighter than low frequency technology).

Parallel operation

The chargers can be mounted in parallel to increase the charging power: up to 4 units (balancing through Master-Slave function).

No derating

Chargers have full charge up to +50°C (122°F) with no loss, resistant to harsh environment.

BV certified version

With integrated touch-screen control panel and relays board (pending).

5-stage charging profile

- **Boost**: charges batteries to 80% of full charge
- **Absorption**: slowly completes remaining charge to 100%
- **Floating**: maintains battery charge
- **Automatic refresh**: prevents sulphation and revitalizes batteries, selectable by keypad pushbutton
- **Reboost**: new automatic Boost phase if DC consumers and the state of batteries so require.

A regulated DC power-supply mode is also available and YPOWER+ chargers can also be used as high-voltage DC-DC converters with input ranging from 121 to 375VDC.

Adaptative charging

Custom-made and simultaneous recharge of 3 or 4 battery banks.
YPOWER+ chargers can be connected to various types of batteries simultanously:
- Opened classic lead
- Sealed, gel or AGM
- Spiral sealed
- Lithium Iron Phosphate (LiFePO4) with BMS

Remote control

The chargers are fitted with a CAN-Bus and a Bluetooth interface as standard.
Connection to an NMEA network is also available through an optional adaptor, refer to charger's options page.

AC-DC BATTERY CHARGERS HPOWER

12V

Part Number	HPO12-90
Model	12V-90A
Recommended battery bank*	600 - 1200Ah
Input	
AC Voltage	From 90 to 265VAC single-phase automatic
DC Voltage	From 121 to 346VDC
Frequency	From 47 to 65Hz automatic
Input current consumption 230/115VAC	6,0A/16,0A
Recommended power for a generator	1600W
Power factor	1
Efficiency	87% typical
Removable input fuses	2 x 20A 250VAC (6,3 x 32) (F1/F2)
Output	
Number of battery banks	3 (including one for the engine battery) : +BAT E, +BAT 1 et +BAT 2 (integrated isolator), 1 negative -BAT. Each bank can be used individually and deliver the rated current
Connection on threaded rods	M6
Rated current / power	90A/1282W
Charging profile	IU or IUoU through internal dip switches (Boost, Absorption and Floating – factory setting). Selectable automatic Refresh
Battery type	Lead-sealed as factory setting - Gel, AGM, Calcium Lead, Lithium, DC power-supply mode, etc. Specific request on demand
Boost voltage	14,4VDC as factory setting for Lead-sealed
Floating voltage	13,8VDC as factory setting for Lead-sealed
Regulation tolerance before output diode and fuse	< 1 % (at rated conditions)
Peak to peak ripple	< 1 % (at rated conditions)
Automotive fuse in the minus pole -BAT	4 x 30A/32V
Environment	
Cooling	Electric fan controlled in temperature and current
Sound level	< 50 dB SPL at 1m
Operating temperature	Rated charge from -20°C (-4°F) to +50°C (122°F), derating above 50°C (122°F) Automatic charger switch off above 60°C (140°F); automatic restart when temperature decreases
Storage T°	From -20°C to +70°C (-4°F to +158°F)
Relative humidity	Up to 96 % without condensation
Casing	
Material	Painted Aluminium
Dimensions (length, height, depth)	270 x 360 x 130 mm (106 x 141,7 x 51,1 in)
Weight	6,8 kg (15 lbs)
Fixing screw (wall)	4 x M6 round screws
Protection factor	IP23
PCB protection	Water-repellent varnish (marine environment)
Standards	
CE / EMC	EN61204-3
CE / Security	EN60335-2-29
Protections	
	Against leaking input surge by VDR (Voltage Dependant Resistor) - Not covered by warranty / Against output polarity reversal by fuse rupture Against short-circuit and surge / Against abnormal overheating by cutting off the charger
Communication	
	CAN-Bus
Options	
Temperature probe	Output voltage compensation for 12V : -18mV/°C (ref: 2.8m: STP-UNI-2.8 or 5m: STP-UNI-5.0)
Parallel mounting	KIT-HPO-LINK : up to 4 units with real time balancing feature
2.4" remote color touch-screen control panel	UNI-DISPLAY-R

* Overall battery capacity recommended for lead-type batteries, C/10. For Lithium batteries, C/3, consult us if needed.

AC-DC BATTERY CHARGERS HPOWER

24V

Part Number	HPO24-45	HPO24-60	HPO24-80	HPO24-100
Model	24V-45A	24V-60A	24V-80A	24V-100A
Recommended battery bank*	300 - 600Ah	500 - 800Ah	700 - 1000Ah	800 - 1300Ah
Input				
AC Voltage	From 90 to 265VAC single-phase automatic			
DC Voltage	From 121 to 346VDC			
Frequency	From 47 to 65Hz automatic			
Input current consumption 230/115VAC	6,0A/16,0A	9,0A/20,0A	11,0A/20,0A	15,0A/30,0A
Recommended power for a generator	1600W	2100W	2800W	3520W
Power factor	1			
Efficiency	87% typical			
Removable input fuses	2 x 20A 250VAC (6,3 x 32)	2 x 25A 250VAC (6,3 x 32)		2 x 32A 250VAC (6,3 x 32)
Output				
Number of battery banks	3 (including one for the engine battery) : +BAT E, +BAT 1 et +BAT 2 (integrated isolator), 1 negative -BAT. Each bank can be used individually and deliver the rated current			
Connection on threaded rods	M6			
Rated current / power	45A/1282W	60A/1710W	80A/2280W	100A/2850W
Charging profile	IU or IUoU through internal dip switches (Boost, Absorption and Floating – factory setting). Selectable automatic Refresh			
Battery type	Lead-sealed as factory setting - Gel, AGM, Calcium Lead, Lithium, DC power-supply mode, etc. Specific request on demand			
Boost voltage	28,8VDC as factory setting for Lead-sealed			
Floating voltage	27,6VDC as factory setting for Lead-sealed			
Regulation tolerance before output diode and fuse	< 1 % (at rated conditions)			
Peak to peak ripple	< 1 % (at rated conditions)			
Automotive fuse in the minus pole -BAT	2 x 30A/32V	3 x 25A/32V	4 x 25A/32V	4 x 30A/32V
Environment				
Cooling	Electric fan controlled in temperature and current			
Sound level	< 50 dB SPL at 1m			
Operating temperature	Rated charge from -20°C (-4°F) to +50°C (122°F), derating above 50°C (122°F) Automatic charger switch off above 60°C (140°F); automatic restart when temperature decreases			
Storage T°	From -20°C to +70°C (-4°F to +158°F)			
Relative humidity	Up to 96 % without condensation			
Casing				
Material	Painted Aluminium			
Dimensions (length, height, depth)	270 x 360 x 130 mm (106 x 141,7 x 51,1 in)			270x410x130mm (106 x 161,4x51,1in)
Weight	6,8 kg (15 lbs)			9,0 kg (19,8 lbs)
Fixing screw (wall)	4 x M6 round screws			
Protection factor	IP23			
PCB protection	Water-repellent varnish (marine environment)			
Standards				
CE / EMC	EN61204-3			
CE / Security	EN60335-2-29			
Protections				
	Against leaking input surge by VDR (Voltage Dependant Resistor) - Not covered by warranty / Against output polarity reversal by fuse rupture Against short-circuit and surge / Against abnormal overheating by cutting off the charger			
Communication				
	CAN-Bus			
Options				
Temperature probe	Output voltage compensation for 24V : -36mV/°C (ref: 2.8m: STP-UNI-2.8 or 5m: STP-UNI-5.0)			
Parallel mounting	KIT-HPO-LINK : up to 4 units with real time balancing feature			
2.4" remote color touch-screen control panel	UNI-DISPLAY-R			

* Overall battery capacity recommended for lead-type batteries, C/10. For Lithium batteries, C/3, consult us if needed.

AC-DC BATTERY CHARGERS HPOWER

48V

Part Number	HPO48-30	HPO48-40	HPO48-50
Model	48V / 30A	48V / 40A	48V-50A
Recommended battery bank*	150-400Ah	250-500Ah	350-700Ah
Input			
AC Voltage	From 90 to 265VAC single-phase automatic		
DC Voltage	From 121 to 346VDC		
Frequency	From 47 to 65Hz automatic		
Input current consumption 230/115VAC	9,0A/20,0A	11,0A/25,0A	15,0A/30,0A
Recommended power for a generator	2100W	2650W	3520W
Power factor	1		
Efficiency	87% typical		
Removable input fuses	2 x 20A 250VAC (6,3 x 32)	2 x 25A 250VAC (6,3 x 32)	2 x 32A 250VAC (6,3 x 32)
Output			
Number of battery banks	3 (including one for the engine battery) : +BAT E, +BAT 1 et +BAT 2 (integrated isolator), 1 negative -BAT. Each bank can be used individually and deliver the rated current		
Connection on threaded rods	M6		
Rated current / power	30A/1710W	40A/2280W	50A/2850W
Charging profile	IU or IUoU through internal dip switches (Boost, Absorption and Floating – factory setting). Selectable automatic Refresh		
Battery type	Lead-sealed as factory setting - Gel, AGM, Calcium Lead, Lithium, DC power-supply mode, etc. Specific request on demand		
Boost voltage	57,6VDC as factory setting for Lead-sealed		
Floating voltage	52,2VDC as factory setting for Lead-sealed		
Regulation tolerance before output diode and fuse	< 1 % (at rated conditions)		
Peak to peak ripple	< 1 % (at rated conditions)		
Automotive fuse in the minus pole -BAT	2x20A/80V	2x20A/80V	3x20A/80V
Environment			
Cooling	Electric fan controlled in temperature and current		
Sound level	< 50 dB SPL at 1m		
Operating temperature	Rated charge from -20°C (-4°F) to +50°C (122°F), derating above 50°C (122°F) Automatic charger switch off above 60°C (140°F); automatic restart when temperature decreases		
Storage T°	From -20°C to +70°C (-4°F to +158°F)		
Relative humidity	Up to 96 % without condensation		
Casing			
Material	Painted Aluminium		
Dimensions (length, height, depth)	270 x 360 x 130 mm (106 x 141,7 x 51,1 in)		270 x 410 x 130 mm (106 x 161,4 x 51,1 in)
Weight	6,8 kg (15 lbs)		9,0 kg (19,8 lbs)
Fixing screw (wall)	4 x M6 round screws		
Protection factor	IP23		
PCB protection	Water-repellent varnish (marine environment)		
Standards			
CE / EMC	EN61204-3		
CE / Security	EN60335-2-29		
Protections			
	Against leaking input surge by VDR (Voltage Dependant Resistor) - Not covered by warranty / Against output polarity reversal by fuse rupture Against short-circuit and surge / Against abnormal overheating by cutting off the charger		
Communication			
	CAN-Bus		
Options			
Temperature probe	Output voltage compensation for 48V : -72mV/°C (ref: 2.8m: STP-UNI-2.8 or 5m: STP-UNI-5.0)		
Parallel mounting	KIT-HPO-LINK : up to 4 units with real time balancing feature		
2.4" remote color touch-screen control panel	UNI-DISPLAY-R		

* Overall battery capacity recommended for lead-type batteries, C/10. For Lithium batteries, C/3, consult us if needed.

AC-DC BATTERY CHARGERS HPOWER CERTIFIED

Marine type-approved

BV certified version

With integrated touch-screen control panel and relays board (pending).

BUREAU VERITAS

12V

Part Number	HPO12-90-CERT
Model	12V-90A
Recommended battery bank*	600 - 1200Ah
Input	
AC Voltage	From 90 to 265VAC single-phase automatic
DC Voltage	From 121 to 346VDC
Frequency	From 47 to 65Hz automatic
Input current consumption 230/115VAC	6,0A/16,0A
Recommended power for a generator	1600W
Power factor	1
Efficiency	87% typical
Removable input fuses	2 x 20A 250VAC (6,3 x 32) (F1/F2)
Output	
Number of battery banks	3 (including one for the engine battery) : +BAT E, +BAT 1 et +BAT 2 (integrated isolator), 1 negative -BAT. Each bank can be used individually and deliver the rated current
Connection on threaded rods	M6
Rated current / power	90A/1282W
Charging profile	IU or IUoU through internal dip switches (Boost, Absorption and Floating – factory setting). Selectable automatic Refresh
Battery type	Lead-sealed as factory setting - Gel, AGM, Calcium Lead, Lithium, DC power-supply mode, etc. Specific request on demand
Boost voltage	14,4VDC as factory setting for Lead-sealed
Floating voltage	13,8VDC as factory setting for Lead-sealed
Regulation tolerance before output diode and fuse	< 1 % (at rated conditions)
Peak to peak ripple	< 1 % (at rated conditions)
Automotive fuse in the minus pole -BAT	4 x 30A/32V
Environment	
Cooling	Electric fan controlled in temperature and current
Sound level	< 50 dB SPL at 1m
Operating temperature	Rated charge from -20°C (-4°F) to +50°C (122°F), derating above 50°C (122°F) Automatic charger switch off above 60°C (140°F); automatic restart when temperature decreases
Storage T°	From -20°C to +70°C (-4°F to +158°F)
Relative humidity	Up to 96 % without condensation
Casing	
Material	Painted Aluminium
Dimensions (length, height, depth)	270 x 360 x 130 mm (106 x 141,7 x 51,1 in)
Weight	6,8 kg (15 lbs)
Fixing screw (wall)	4 x M6 round screws
Protection factor	IP23
PCB protection	Water-repellent varnish (marine environment)
Standards	
CE / EMC	EN61204-3
CE / Security	EN60335-2-29
Protections	
Against leaking input surge by VDR (Voltage Dependant Resistor) - Not covered by warranty / Against output polarity reversal by fuse rupture Against short-circuit and surge / Against abnormal overheating by cutting off the charger	
Communication	
CAN-Bus	
Options	
Temperature probe	Output voltage compensation for 12V : -18mV/°C (ref: 2.8m: STP-UNI-2.8 or 5m: STP-UNI-5.0)
Parallel mounting	KIT-HPO-LINK : up to 4 units with real time balancing feature
2.4" remote color touch-screen control panel	UNI-DISPLAY-R : also available integrated on the front panel, please consult us

* Overall battery capacity recommended for lead-type batteries, C/10. For Lithium batteries, C/3, consult us if needed.

AC-DC BATTERY CHARGERS HPOWER CERTIFIED

Marine type-approved

BV certified version

With integrated touch-screen control panel and relays board (pending).

BUREAU VERITAS

24V

Part Number	HPO24-45-CERT	HPO24-60-CERT	HPO24-80-CERT	HPO24-100-CERT
Model	24V-45A	24V-60A	24V-80A	24V-100A
Recommended battery bank*	300 - 600Ah	500 - 800Ah	700 - 1000Ah	800 - 1300Ah
Input				
AC Voltage	From 90 to 265VAC single-phase automatic			
DC Voltage	From 121 to 346VDC			
Frequency	From 47 to 65Hz automatic			
Input current consumption 230/115VAC	6,0A/16,0A	9,0A/20,0A	11,0A/20,0A	15,0A/30,0A
Recommended power for a generator	1600W	2100W	2800W	3250W
Power factor	1			
Efficiency	87% typical			
Removable input fuses	2 x 20A 250VAC (6,3 x 32) (F1/F2)	2 x 25A 250VAC (6,3 x 32) (F1/F2)		2 x 32A 250VAC (6,3 x 32) (F1/F2)
Output				
Number of battery banks	3 (including one for the engine battery) : +BAT E, +BAT 1 et +BAT 2 (integrated isolator), 1 negative -BAT. Each bank can be used individually and deliver the rated current			
Connection on threaded rods	M6			
Rated current / power	45A/1282W	60A/1710W	80A/2280W	100A/2850W
Charging profile	IU or IUoU through internal dip switches (Boost, Absorption and Floating – factory setting). Selectable automatic Refresh			
Battery type	Lead-sealed as factory setting - Gel, AGM, Calcium Lead, Lithium, DC power-supply mode, etc. Specific request on demand			
Boost voltage	28,8VDC as factory setting for Lead-sealed			
Floating voltage	27,6VDC as factory setting for Lead-sealed			
Regulation tolerance before output diode and fuse	< 1 % (at rated conditions)			
Peak to peak ripple	< 1 % (at rated conditions)			
Automotive fuse in the minus pole -BAT	2 x 30A/32V	3 x 25A/32V	4 x 25A/32V	4 x 30A/32V
Environment				
Cooling	Electric fan controlled in temperature and current			
Sound level	< 50 dB SPL at 1m			
Operating temperature	Rated charge from -20°C (-4°F) to +50°C (122°F), derating above 50°C (122°F) Automatic charger switch off above 60°C (140°F); automatic restart when temperature decreases			
Storage T°	From -20°C to +70°C (-4°F to +158°F)			
Relative humidity	Up to 96 % without condensation			
Casing				
Material	Painted Aluminium			
Dimensions (length, height, depth)	270 x 360 x 130 mm (106 x 141,7 x 51,1 in)			270 x 410 x 130 mm (106 x 161,4 x 51,1 in)
Weight	6,8 kg (15 lbs)			9,0 kg (19,8 lbs)
Fixing screw (wall)	4 x M6 round screws			
Protection factor	IP23			
PCB protection	Water-repellent varnish (marine environment)			
Standards				
CE / EMC	EN61204-3			
CE / Security	EN60335-2-29			
Protections				
Against leaking input surge by VDR (Voltage Dependant Resistor) - Not covered by warranty / Against output polarity reversal by fuse rupture Against short-circuit and surge / Against abnormal overheating by cutting off the charger				
Communication				
CAN-Bus				
Options				
Temperature probe	Output voltage compensation for 24V : -36mV/°C (ref: 2.8m: STP-UNI-2.8 or 5m: STP-UNI-5.0)			
Parallel mounting	KIT-HPO-LINK : up to 4 units with real time balancing feature			
2.4" remote color touch-screen control panel	UNI-DISPLAY-R : also available integrated on the front panel, please consult us			

* Overall battery capacity recommended for lead-type batteries, C/10. For Lithium batteries, C/3, consult us if needed.

Parallel mounting

Up to 4 x chargers in parallel
Balancing via LIN BUS
1 single display
CAN-Bus

IVECO © Maillait Stevenin Nicolas

DC-DC converter-chargers

DCPOWER+ 800W

SD 200W

Silent

60°C

No derating

Bluetooth

Li
Lithium
6.941

Lithium ready

CAN-BUS
Interface

DCPOWER+

Warranty 3 years

8.9/10 Repairability index

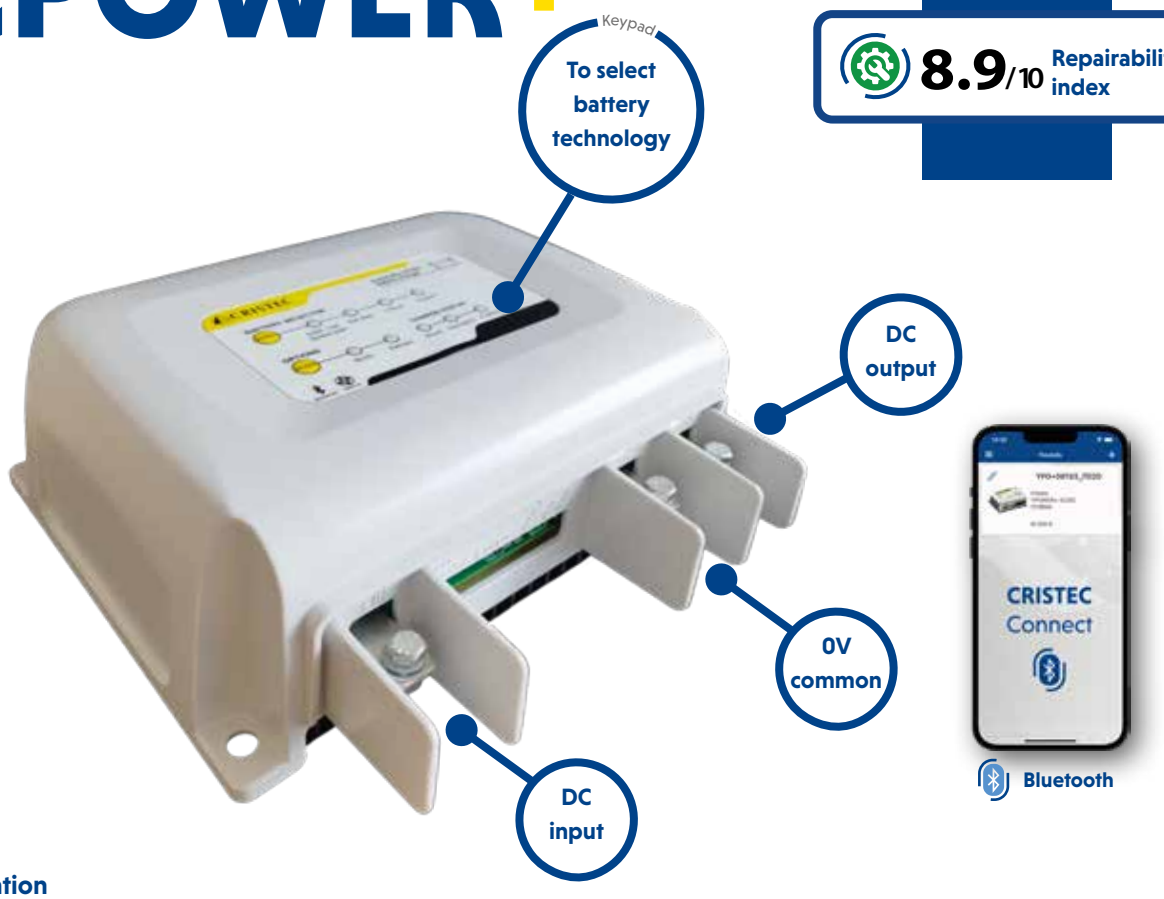

Presentation

DCPOWER+ converter-chargers have been designed to charge a 12, 24, 36 or 48V battery bank from a 12, 24, 36 or 48V network. The most typical case of use is the 24V bow-thruster battery bank charge from the 12V onboard network (model YPO12- 24/30). They also allow a LiFePO4 battery to be recharged from a Lead battery connected to an alternator.

Thanks to their large scale of input and output voltage, they can be configured as a simple converter or as a battery charger.
In this case, the charging curve delivered is the same as the one of a smart charger :
- 5 steps
- all types of batteries

Silent operating

CRISTEC is the only manufacturer offering 800W converter-chargers with natural convection (without fan). This advantage gives the DCPOWER+ chargers a completely silent operation and an optimized lifespan. It is therefore possible to install them anywhere on board, including under a berth.

Low energy bluetooth

The chargers are equipped with a Bluetooth Low Energy (BLE), variant of "classic" Bluetooth. The major advantage of BLE is its low power consumption as it consumes half of a classic Bluetooth.

No derating

Chargers have full charge up to +60°C (140°F) with no loss, resistant to harsh environments.

Ignition protected

They can be installed in the engine room thanks to **ISO8846/SAE J1171** compliance which protects against ignition of flammable gases.

5-stage charging profile

- **Boost**: charges batteries to 80% of full charge
- **Absorption**: slowly completes remaining charge to 100%
- **Floating**: maintains battery charge
- **Automatic refresh**: prevents sulphation and revitalizes batteries, selectable by keypad pushbutton
- **Reboost**: new automatic Boost phase if DC consumers and the state of batteries so require.

Adaptative charging

DCPOWER+ chargers are compatible with all types of batteries:
- Opened classic lead
- Sealed, gel or AGM
- Spiral sealed

Lithium Iron Phosphate (LiFePO4) with BMS
Selection of your technology of battery is easy to do through the cover keypad.

Remote control

The chargers are fitted with CAN-Bus and Bluetooth interface.

DC-DC CONVERTER - CHARGERS DCPOWER+

12V

Part Number	DC12-12/60PL	DC12-24/30PL	YPO12-36/15	YPO12-48/10
Model	12-12V/60A	12-24V/30A	12-36V/15A	12-48V/10A
Recommended battery bank*	500-700Ah	200-400Ah	100-200Ah	80-120Ah
Input				
Voltage	10V -16V		10V -64V	
Maximum current	65A		45A	
Nominal Power	800W		650W	570W
Efficiency	92.8% in 240VAC & 91% in 120VAC			
Input fuses	3 * 25A /32V		3 * 20A /80V	
Output				
Number of battery banks	1			
Rated current	60A	30A	15A	10A
Charging curve	IU or IUoU through front keypad push-button or CAN-BUS (Boost, Absorption, Floating and Refresh – factory setting)			
Battery type	Lead sealed as factory setting - Other choices through internal setting: gel, AGM, calcium lead, lithium, stabilized power supply, etc.			
Boost voltage (default)	14.4VDC	28.8VDC	43,2VDC	57.6VDC
Floating voltage (default)	13.8VDC	27.6VDC	41,4VDC	52.2VDC
Regulation tolerance	< 2% (at rated conditions)			
Peak to peak ripple and noise	< 2% (at rated conditions)			
Automotive fuse	3 x 25A/32V	2 x 25A/32V	2 x 20A /80V	1 x 20A /80V
Environment				
Cooling	Natural (fanless)			
Sound level	0 dB			
Operating T°	From -20°C to +60°C (-4°F to 140°F), derating above 60°C (140°F). Above 65°C (149°F), current limitation			
Storage T°	From -20°C to +70°C (-4°F to 158°F)			
Relative humidity	up to 70% (95% without condensation)			
Bluetooth	Low energy bluetooth (BLE) - Power: +9dBm (frequency: 2412-2484MHz)			
Casing				
Material	Aluminium sink frame / Thermoplastic body			
Dimensions (length, height, depth)	238 x 220 x 81mm (9.4 x 8.7 x 3.2 in)		236 x 180 x 96mm (9.2 x 7.0 x 3.7 in)	
Weight	2kg (4.4 lb)			
Fixing center distance	219 x 155mm (8.6 x 6.1 in)			
Fixing screw (wall)	4 M5 round head screws			
Protection factor	IP22			
Electronic card protection	Water-repellent varnish (marine environment)			
Standards				
CE declaration of conformity	Available on request			
CE / EMC	EN61204-3			
CE / Security (renewal)	EN60335-2-29. E-marking E2*10R06/01*21068*00			
Protections				
	Polarity reversal, short-circuit, abnormal overheating			
Communication				
	CAN-Bus / Bluetooth			
Options				
	Temperature probe ref: 2.8m: STP-UNI-2.8 or 5m: STP-UNI-5.0 / OTD probe (Over Temperature Device) + alternator STP-ALT-2.4 / Parrallel mounting			

* Overall battery capacity recommended for lead-type batteries, C/10. For Lithium batteries, C/3, consult us if needed.

DC-DC CONVERTER - CHARGERS DCPOWER+

24V

Part Number	DC24-12/60PL	DC24-24/30PL	YPO24-36/20	YPO24-48/15
Model	24-12V/60A	24-24V/30A	24-36V/20A	24-48V/15A
Recommended battery bank*	500-700Ah	200-400Ah	150-250Ah	100-200Ah
Input				
Voltage	20V -32V		20V -64V	
Maximum current	20A	32A	25A	32A
Nominal Power	800W		650W	570W
Efficiency	96% typical			
Input fuses	2 x 25A /32V	2 x 25A /32V	3 x 20A /80V	2 x 20A /80V
Output				
Number of battery banks	1			
Rated current	60A	30A	20A	15A
Charging curve	IU or IUoU through front keypad push-button or CAN-BUS (Boost, Absorption, Floating and Refresh – factory setting)			
Battery type	Lead sealed as factory setting - Other choices through internal setting: gel, AGM, calcium lead, lithium, stabilized power supply, etc.			
Boost voltage (default)	14.4VDC	28.8VDC	43,2VDC	57.6VDC
Floating voltage (default)	13.8VDC	27.6VDC	41,4VDC	52.2VDC
Regulation tolerance	< 2% (at rated conditions)			
Peak to peak ripple and noise	< 2% (at rated conditions)			
Automotive fuse	3 x 25A/32V	2 x 25A/32V	2 * 20A /80V	1 * 20A /80V
Environment				
Cooling	Natural (fanless)			
Sound level	0 dB			
Operating T°	From -20°C to +60°C (-4°F to 140°F), derating above 60°C (140°F). Above 65°C (149°F), current limitation			
Storage T°	From -20°C to +70°C (-4°F to 158°F)			
Relative humidity	up to 70% (95% without condensation)			
Bluetooth	Low energy bluetooth (BLE) - Power: +9dBm (frequency: 2412-2484MHz)			
Casing				
Material	Aluminium sink frame / Thermoplastic body			
Dimensions (length, height, depth)	238 x 220 x 81mm (9.4 x 8.7 x 3.2 in)		236 x 180 x 96mm (9.2 x 7.0 x 3.7 in)	
Weight	2kg (4.4 lb)			
Fixing center distance	219 x 155mm (8.6 x 6.1 in)			
Fixing screw (wall)	4 M5 round head screws			
Protection factor	IP22			
Electronic card protection	Water-repellent varnish (marine environment)			
Standards				
CE declaration of conformity	Available on request			
CE / EMC	EN61204-3			
CE / Security (renewal)	EN60335-2-29. E-marking E2*10R06/01*21068*00			
Protections				
	Polarity reversal, short-circuit, abnormal overheating			
Communication				
	CAN-Bus / Bluetooth			
Options				
	Temperature probe ref: 2.8m: STP-UNI-2.8 or 5m: STP-UNI-5.0 / OTD probe (Over Temperature Device) + alternator STP-ALT-2.4 / Parrallel mounting			

* Overall battery capacity recommended for lead-type batteries, C/10. For Lithium batteries, C/3, consult us if needed.

DC-DC CONVERTER - CHARGERS DCPOWER+

36V

Part Number	YPO36-12/40	YPO36-24/30	YPO36-36/20	YPO36-48/15
Model	36-12V/40A	36-24V/30A	36-36V/20A	36-48V/15A
Recommended battery bank*	300-500Ah	200-400Ah	150-250Ah	100-200Ah
Input				
Voltage	30V -48V		30V -64V	
Maximum current	20A	25A		
Nominal Power	570W	860W		
Efficiency	96% typical			
Input fuses	2 x 20A /80V			
Output				
Number of battery banks	1			
Rated current	40A	30A	20A	15A
Charging curve	IU or IUoU through front keypad push-button or CAN-BUS (Boost, Absorption, Floating and Refresh – factory setting)			
Battery type	Lead sealed as factory setting - Other choices through internal setting: gel, AGM, calcium lead, lithium, stabilized power supply, etc.			
Boost voltage (default)	14.4VDC	28.8VDC	43,2VDC	57.6VDC
Floating voltage (default)	13.8VDC	27.6VDC	41,4VDC	52.2VDC
Regulation tolerance	< 2% (at rated conditions)			
Peak to peak ripple and noise	< 2% (at rated conditions)			
Automotive fuse	2 x 20A /80V			
Environment				
Cooling	Natural (fanless)			
Sound level	0 dB			
Operating T°	From -20°C to +60°C (-4°F to 140°F), derating above 60°C (140°F). Above 65°C (149°F), current limitation			
Storage T°	From -20°C to +70°C (-4°F to 158°F)			
Relative humidity	up to 70% (95% without condensation)			
Bluetooth	Low energy bluetooth (BLE) - Power: +9dBm (frequency: 2412-2484MHz)			
Casing				
Material	Aluminium sink frame / Thermoplastic body			
Dimensions (length, height, depth)	236 x 180 x 96mm (9.2 x 7.0 x 3.7 in)			
Weight	2kg (4.4 lb)			
Fixing center distance	219 x 155mm (8.6 x 6.1 in)			
Fixing screw (wall)	4 M5 round head screws			
Protection factor	IP22			
Electronic card protection	Water-repellent varnish (marine environment)			
Standards				
CE declaration of conformity	Available on request			
CE / EMC	EN61204-3			
CE / Security (renewal)	EN60335-2-29. E-marking E2*10R06/01*21068*00			
Protections				
	Polarity reversal, short-circuit, abnormal overheating			
Communication				
	CAN-Bus / Bluetooth			
Options				
	Temperature probe ref: 2.8m: STP-UNI-2.8 or 5m: STP-UNI-5.0 / OTD probe (Over Temperature Device) + alternator STP-ALT-2.4 / Parrallel mounting			

* Overall battery capacity recommended for lead-type batteries, C/10. For Lithium batteries, C/3, consult us if needed.

DC-DC CONVERTER - CHARGERS DCPOWER+

48V

Part Number	YPO48-12/40	YPO48-24/30	YPO48-36/20	YPO48-48/15	YPO48-48/30
Model	48-12V/40A	48-24V/30A	48-36V/20A	48-48V/15A	48-48V/30A
Recommended battery bank*	300-500Ah	200-400Ah	150-250Ah	100-200Ah	200-400Ah
Input					
Voltage	40V-64V				
Maximum current	15A	20A			30A
Nominal Power	570W	860W			1720W
Efficiency	96% typical				
Input fuses	2 x 20A /80V				
Output					
Number of battery banks	1				
Rated current	40A	30A	20A	15A	30A
Charging curve	IU or IUoU through front keypad push-button or CAN-BUS (Boost, Absorption, Floating and Refresh – factory setting)				100-200Ah
Battery type	Lead sealed as factory setting - Other choices through internal setting: gel, AGM, calcium lead, lithium, stabilized power supply, etc.				
Boost voltage (default)	14.4VDC	28.8VDC	43,2VDC	57.6VDC	
Floating voltage (default)	13.8VDC	27.6VDC	41,4VDC	52.2VDC	
Regulation tolerance	< 2% (at rated conditions)				
Peak to peak ripple and noise	< 2% (at rated conditions)				
Automotive fuse	2 x 20A /80V				
Environment					
Cooling	Natural (fanless)				
Sound level	0 dB				
Operating T°	From -20°C to +60°C (-4°F to 140°F), derating above 60°C (140°F). Above 65°C (149°F), current limitation				
Storage T°	From -20°C to +70°C (-4°F to 158°F)				
Relative humidity	up to 70% (95% without condensation)				
Bluetooth	Low energy bluetooth (BLE) - Power: +9dBm (frequency: 2412-2484MHz)				
Casing					
Material	Aluminium sink frame / Thermoplastic body				
Dimensions (length, height, depth)	236 x 180 x 96mm (9.2 x 7.0 x 3.7 in)				
Weight	2kg (4.4 lb)				
Fixing center distance	219 x 155mm (8.6 x 6.1 in)				
Fixing screw (wall)	4 M5 round head screws				
Protection factor	IP22				
Electronic card protection	Water-repellent varnish (marine environment)				
Standards					
CE declaration of conformity	Available on request				
CE / EMC	EN61204-3				
CE / Security (renewal)	EN60335-2-29. E-marking E2*10R06/01*21068*00				
Protections					
	Polarity reversal, short-circuit, abnormal overheating				
Communication					
	CAN-Bus / Bluetooth				
Options					
	Temperature probe ref: 2.8m: STP-UNI-2.8 or 5m: STP-UNI-5.0 / OTD probe (Over Temperature Device) + alternator STP-ALT-2.4 / Parrallel mounting				

* Overall battery capacity recommended for lead-type batteries, C/10. For Lithium batteries, C/3, consult us if needed.

Typical installation

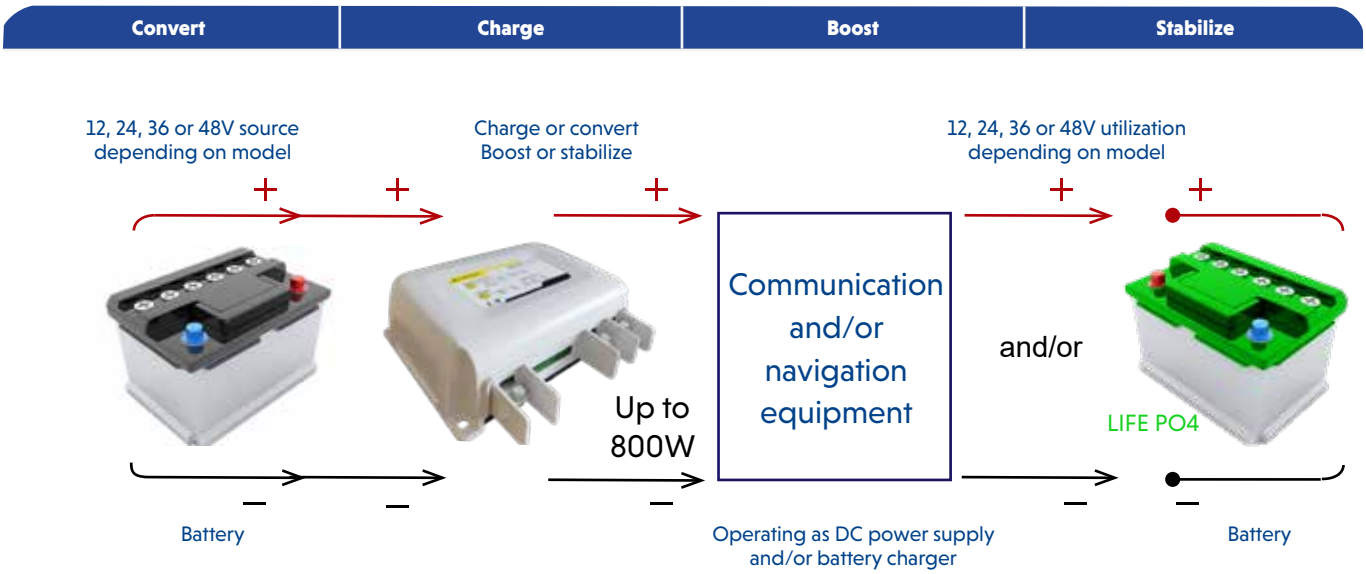

Parallel installation

Up to 4 units can be parallel-mounted using CAN-Bus.
The major unit will be declared as MASTER and the other ones as SLAVE.

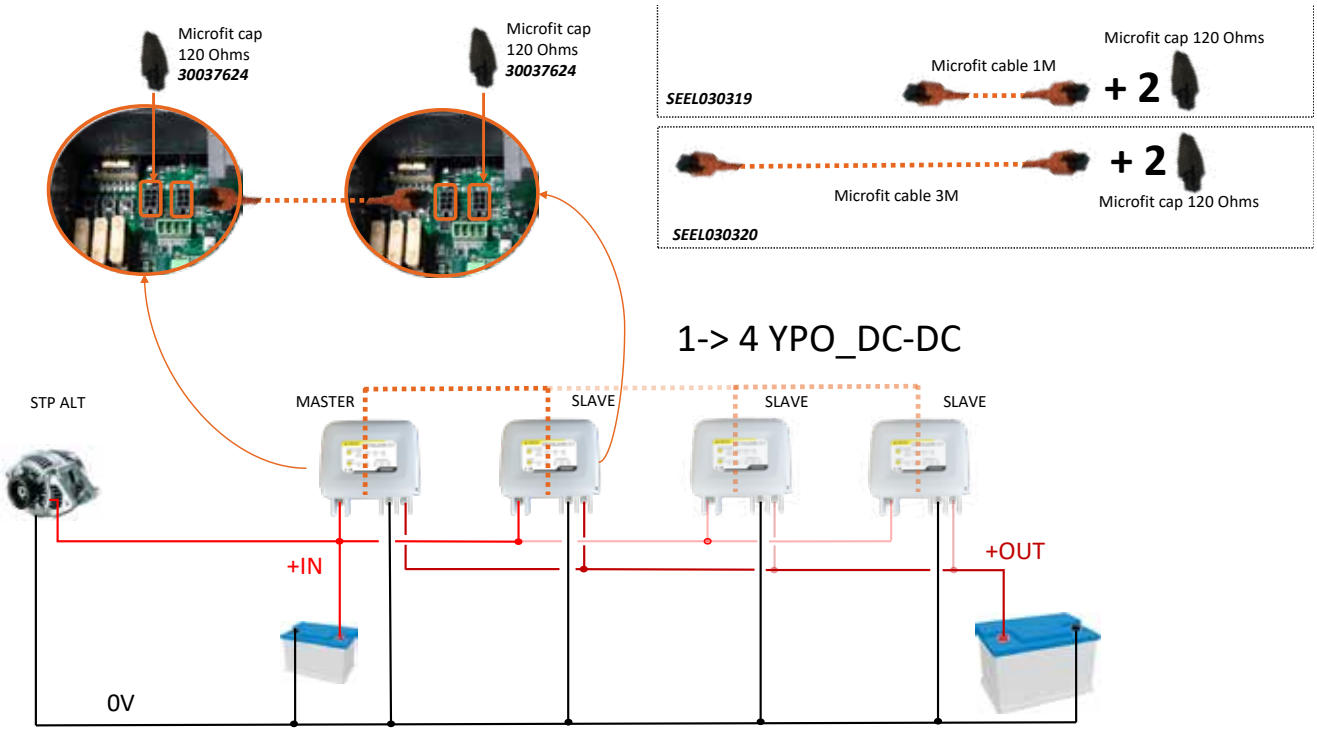

Flexible settings

Numerous settings are available such as output power limitation, input voltage starting threshold, maximum alternator probe temperature, etc.

DC-DC CONVERTER - CHARGERS DCPOWER+

Choosing a charging curve

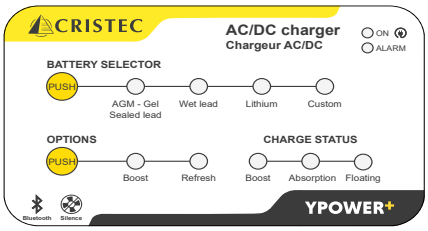

With the PUSH button of the BATTERY SELECTOR you can choose the battery technology and its associated charging curve. If you use the Bluetooth Cristec Connect application on your mobile phone or tablet and choose a different charging curve the CUSTOM led switches on.

When choosing any battery technology above, the BOOST charging curve from the OPTIONS menu is selected by default. When the PUSH button is pressed again, you select the **5-step charging curve** with BOOST and REFRESH as follows :

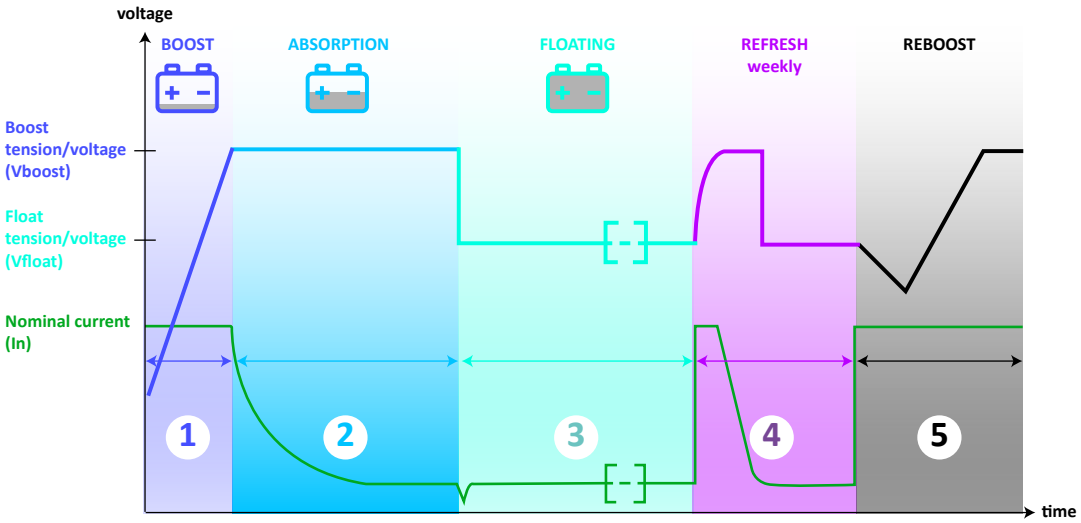

5-step charge curve IUoU with automatic weekly refresh

If no OPTIONS are selected (no green led is lit on the OPTIONS menu) the charging curve starts with the Float voltage.

SD

200W in DC conversion

Warranty 2 years

12V

24V

48V

Presentation

The CRISTEC SD converter chargers are dedicated to the power-supply of electric and electronic equipment.
They guarantee a high quality output voltage and ensure galvanic isolation between input and output. Thanks to their input voltage range they can be connected directly to a battery and used as a battery charger with a UI charge curve. Their dimensions and weight allow an easy maintenance.

General characteristics

- **Input voltage :** 12, 24, 48VDC
- **Input protection :** against polarity reversal; EMI filter; by fuses
- **Output voltage :** 12 or 24 or 48Vdc nominal - Voltage adjustment by external potentiometer
- **Output electric characteristics :** typical efficiency: 75% - Line regulation: 1% - Load regulation: 2% (10 to 100%)
- **Output protection :** against short-circuit; against overload by current limitation; against overvoltage (Vnom +25%)
- **Output power :** 195W
- **Operating temperature :** from 0°C to +50°C
- **Ventilation :** natural
- **Dielectric rigidity :** Input/Output >1000Vdc
- **Standards :** Safety : EN 60950 ; EMC : EN 50081-2
- **Presentation :** in closed box; fixing on screw terminals
- **Dimensions :** 166 x 108 x 80 mm (6.53 x 4.25 x 3.14 in)
- **Weight :** 1,3 Kg (2.2 lbs)

Part Number	Input voltage	Output voltage	Output current	Max. output current
SD203-I1-DD-AL	12 VDC (10 to 18VDC)	12 VDC	16 A	18 A
SD206-I1-DD-AL		24 VDC	8 A	10 A
SD208-I1-DD-AL		48 VDC	4 A	5 A
SD203-I2-DD-AL	24 VDC (18 to 36VDC)	12 VDC	16 A	18 A
SD206-I2-DD-AL		24 VDC	8 A	10 A
SD208-I2-DD-AL		48 VDC	4 A	5 A
SD203-I3-DD-AL	48 VDC (36 to 72VDC)	12 VDC	16 A	18 A
SD206-I3-DD-AL		24 VDC	8 A	10 A
SD208-I3-DD-AL		48 VDC	4 A	5 A

Typical installation

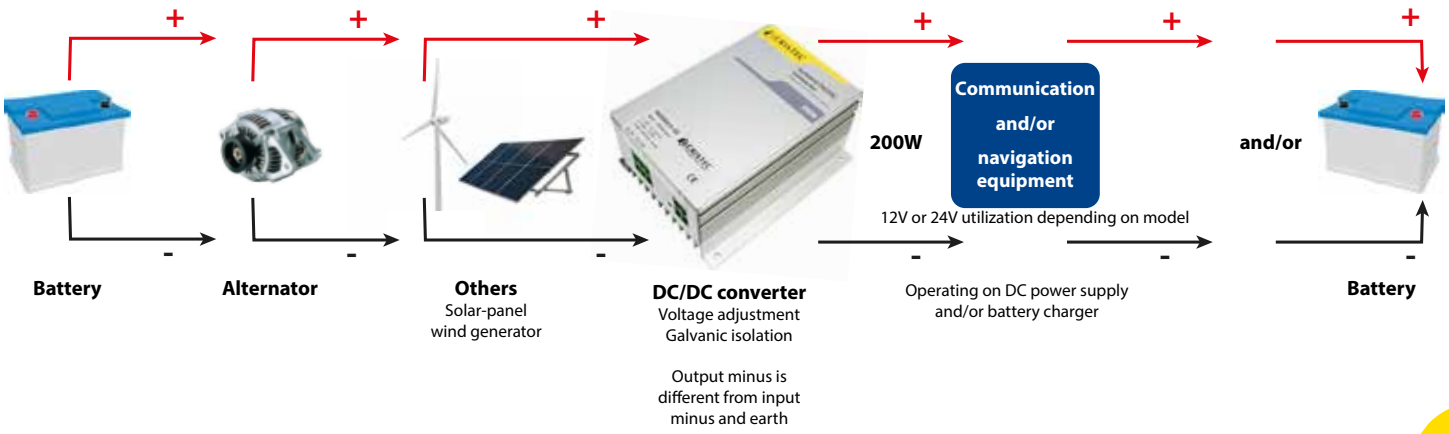

@ANTHENEA

MPPT solar regulator chargers

MPPTPOWER

MPPT technology

Bluetooth

Silent

60°C
No derating

Lithium ready

CAN-BUS interface

MPPTPOWER

Warranty 3 years

8.9/10 Repairability index

Bluetooth

MPPT technology

MPPTPOWER fanless solar charge regulators are designed for installations in 12 or 24V, medium & high power (up to 800W with solar panels in parallel). **MPPT** technology (**M**aximum **P**ower **P**oint **T**racking) optimizes the efficiency of solar panels enabling to recharge batteries faster.

Silent operating

CRISTEC is the only manufacturer offering a high power regulators with natural convection (without fan). This advantage gives the MPPTPOWER chargers a completely silent operation and an optimized lifespan. It is therefore possible to install them anywhere on board, including under a berth.

No derating

Regulators deliver full charge up to +60°C (140°F) with no loss, resistant to harsh environments.

Low energy bluetooth

The chargers are equipped with a Bluetooth Low Energy (BLE), variant of "classic" Bluetooth. The major advantage of BLE is its low power consumption as it consumes half of a classic Bluetooth.

5-stage charging profile

- **Boost**: charges batteries to 80% of full charge
- **Absorption**: slowly completes remaining charge to 100%
- **Floating**: maintains battery charge
- **Automatic refresh**: prevents sulphation and revitalizes batteries, selectable by keypad pushbutton
- **Reboost**: new automatic Boost phase if DC consumers and the state of batteries so require.

Adaptative charging

MPPTPOWER are compatible with all types of batteries:
- Opened classic lead
- Sealed, gel or AGM
- Spiral sealed

Lithium Iron Phosphate (LiFePO4) with BMS
Selection of your technology of battery is easy to do through the cover keypad.

Remote control

The chargers are fitted with CAN-Bus and Bluetooth interface.

MPPTPOWER SOLAR REGULATOR CHARGERS

Part Number	YPO45-12-60/MPPT*	YPO45-24-30/MPPT*	YPO80-12-40/MPPT	YPO80-24-25/MPPT
Model	45V→12V/60A	45V→24V/30A	80V→12V/40A	80V→24V/25A
Input				
Voltage	10 - 45V		12V - 80V	
Maximum input voltage / Open Circuit Voltage (VOC)	45V		80V	
Nominal Power	800W		560W	700W
Input fuses	3 x 25A /32V		2 x 20A /80V	
Output				
Rated current	60A	30A	40A	25A
Floating voltage (default)	13,8VDC	27,6VDC	13,8VDC	27,6VDC
Automotive fuse	3 x 25A /32V		2 x 20A /80V	
Casing				
Dimensions	238 x 220 x 81mm (9.4 x 8.7 x 3.2 in)		236 x 180 x 96mm (9.2 x 7.0 x 3.7 in)	
Weight	2kg (4.4 lb)			
Standards				
CE / EMC	EN61204-3			
CE / Security (renewal)	EN60335-2-29. E-marking E2*10R06/01*21068*00			
Option				
	Temperature probe ref: 2.8m: STP-UNI-2.8 / 5m: STP-UNI-5.0			

*Planned availability : 2025

Typical installation

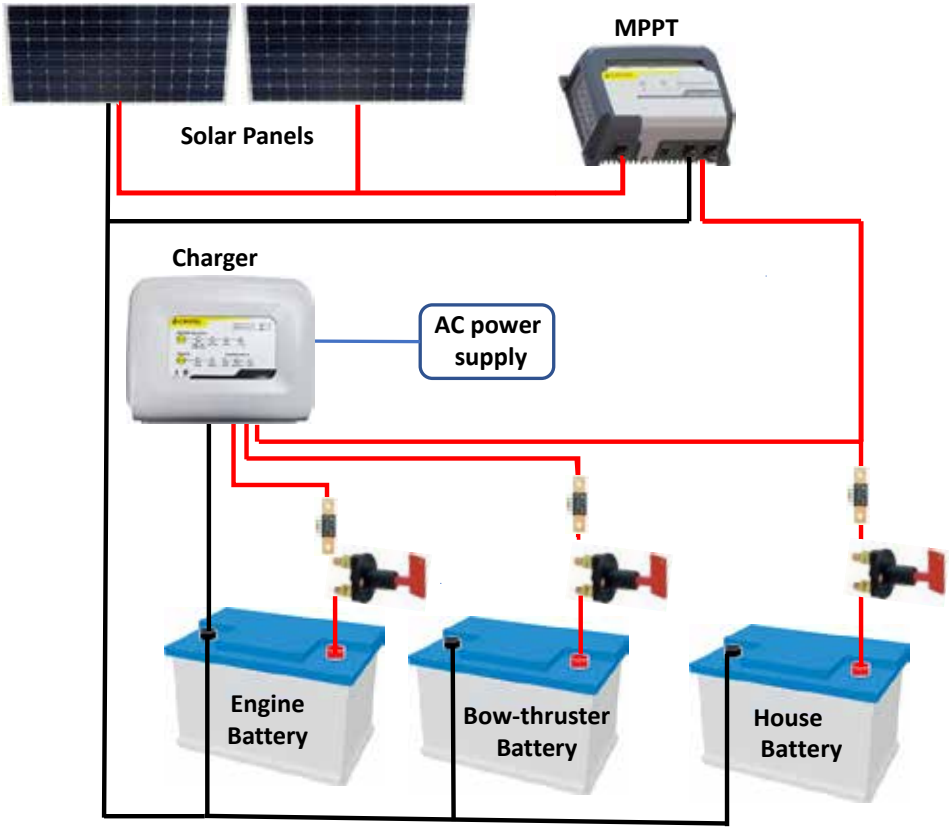

Nautitec/www.jfromero.fr

Shore-power distribution chargers

UEPOWER+

UEPOWER

Silent

Compact

Up to 4 outputs

Bluetooth

Lithium

UEPOWER+

3 Warranty 3 years

9.4/10 Repairability index

Presentation

The new CRISTEC shore-power units combine, in a single cabinet, AC protection and distribution, as well as an automatic battery charger. The complete system meets the European standards in force and makes it possible to optimize size and assembly time. User protection consists of a two-pole differential RCD (Residual Current Device) and the distributions are made by 2 to 6 two-pole circuit breakers (Over Current Protection Device). The battery charger function is ensured by an HF switch-mode electronic board, stemming from the latest YPOWER+ battery charger.

Silent operating

CRISTEC offers shore-power units with natural convection (without fan).
This specificity gives them a completely silent operation and an optimized lifespan.

Up to 4 independent outputs

The shore-power units have either 3 or 4 independent charger outputs, including one dedicated to the engine battery.

Worldwide use

Automatic detection of power supply network, from 90 to 265VAC and from 47 to 65Hz. You do not have to care about the AC power grid and genset voltage.

Easy to install

Selection of the battery technology can be done via the front keypad or via bluetooth application or CAN-BUS communication (according to model).

Remote control

NMEA

The chargers are fitted with a CAN-Bus and a Bluetooth interface as standard. Connection to an NMEA network is also available through an optional adaptor, refer to charger's options page.

5-stage charging profile

- **Boost**: charges batteries to 80% of full charge
- **Absorption**: slowly completes remaining charge to 100%
- **Floating**: maintains battery charge
- **Automatic refresh**: prevents sulphation and revitalizes batteries, selectable by keypad pushbutton
- **Reboost**: new automatic Boost phase if DC consumers and the state of batteries so require.

Adaptative charging

Custom-made and simultaneous recharge of either 3 or 4 battery banks.
UEPOWER+ shore-power units are compatible with all types of batteries:
- Opened classic lead
- Sealed, gel or AGM
- Spiral sealed
- Lithium Iron Phosphate (LiFePO4) with BMS

Low energy bluetooth

The shore-power units are equipped with a Bluetooth Low Energy (BLE), variant of "classic" Bluetooth. The major advantage of BLE is its low power consumption as it consumes half of a classic Bluetooth.

SHORE-POWER DISTRIBUTION CHARGERS
UEPOWER+

12V

	AC electrical panel				Battery charger			
Model	Main RCD	AC outputs	16A circuit breakers	10A circuit breakers	Voltage	Nominal current	Recommended battery bank [1]	Number of outputs
UEYPOPL/12-20/2D*	30mA / 16A	2	-	2	12V	20A	100-200Ah	3
UEYPOPL/12-20/3D*		3		3				
UEYPOPL/12-20/4D*		4		4				
UEYPOPL/12-30/2D*		2	-	2		30A	200-300Ah	3
UEYPOPL/12-30/3D*		3		3				
UEYPOPL/12-30/4D*		4		4				
UEYPOPL/12-40/3D		3	-	3		40A	300-400Ah	4
UEYPOPL/12-40/4D		4		4				
UEYPOPL/12-40/4D3	30mA / 32A		3	1				
UEYPOPL/12-60/3D	30mA / 16A	3	-	3		60A	400-600Ah	4
UEYPOPL/12-60/4D		4		4				
UEYPOPL/12-60/4D3	30mA / 32A		3	1				

Model	UEPOWER+ 12V-20A	UEPOWER+ 12V-30A	UEPOWER+ 12V-40A	UEPOWER+ 12V-60A
Casing				
Material	Frame and cover of EZ steel / Anodized aluminium heatsink			
Dimensions (length, height, depth)	350 x 241 x 171mm (13,77 x 9,48 x 6,73in)			
Weight	7Kg (15,43lbs)			
Fixing center distance	180 x 133mm (7,08 x 5,23in)			
Fixing screw (wall)	4 x M5 round head screws			
Protection factor	IP20			
Input				
Voltage	115VAC [2] / 230VAC +/-15% single-phase			
Frequency	50/60Hz [2]			
Current consumed 230/115VAC	1.3/2.6A	2/4A	2.7/5.6A	4.4/8.7A
Efficiency	92.8% in 240VAC & 91% in 120VAC			
Output				
Number of battery banks	3 separate positive terminals: +BAT E, +BAT 1 and +BAT 2 (integrated MOSFET splitter) 1 negative terminal : -BAT Each bank can be used individually and delivers the rated current		4 separate positive terminals : +BAT E, +BAT 1, +BAT 2 and +BAT 3 (integrated MOSFET splitter) 1 negative terminal : -BAT Each bank can be used individually and delivers the rated current	
Nominal current (+/-7%) @ rated power	20A/276W	30A/356W	40A/570W	60A/855W
Charging curve	Charging curve selection by keypad, Bluetooth application or CAN-BUS communication			
Battery type	Sealed lead, Gel, AGM as factory setting - Other selections by pushbutton : calcium lead, LiFePO4, DC power-supply mode, etc. Specific request on demand			
Automotive fuses mounted in series in minus pole -BAT	1 x 30A/32V	2 x 30A/32V	3 x 30A/32V	4 x 30A/32V
Electrical protections				
	Against transient input overvoltage by varistor (not covered by warranty) / Against output polarity reversal by fuses / Against abnormal overheating			
Environement				
Sound level	0 dB			
Bluetooth	Low energy bluetooth (BLE) - Power: +9dBm (frequency: 2412-2484MHz)			
Standards				
CE / EMC	NF EN61000-6-1, NF EN61000-6-2			
Communication				
	CAN-Bus / Low Energy Bluetooth (BLE)			
Option				
Temperature probe	Output voltage compensation -18mV/°C (ref: 2.8m: STP-UNI-2.8 or 5m: STP-UNI-5.0)			

[1] Overall battery capacity recommended for lead-type batteries, C/10. For Lithium batteries, C/3, consult us if needed.
[2] Consult CRISTEC for any use at 115VAC/60Hz
* Planned avaibility 2025

SHORE-POWER DISTRIBUTION CHARGERS
UEPOWER+

24V

	AC electrical panel				Battery charger			
Model	Main RCD	AC outputs	16A circuit breakers	10A circuit breakers	Voltage	Nominal current	Recommended battery bank[1]	Number of outputs
UEYPOPL/24-35/3D*	30mA / 16A	3	-	3	24V	35A	200-400Ah	4
UEYPOPL/24-35/4D*		4		4				
UEYPOPL/24-35/4D3*	30mA / 32A		3	1				

Model	UEPOWER+ 24V-35A
Casing	
Material	Frame and cover of EZ steel / Anodized aluminium heatsink
Dimensions (length, height, depth)	350 x 241 x 171mm (13,77 x 9,48 x 6,73in)
Weight	7Kg (15,43lbs)
Fixing center distance	180 x 133mm (7,08 x 5,23in)
Fixing screw (wall)	4 x M5 round head screws
Protection factor	IP20
Input	
Voltage	115VAC[2] / 230VAC +/-15% single-phase
Frequency	50/60Hz[2]
Current consumed 230/115VAC	4.4/8.7A
Efficiency	92.8% in 240VAC & 91% in 120VAC
Output	
Number of battery banks	4 separate positive terminals : +BAT E, +BAT 1, +BAT 2 and +BAT 3 (integrated MOSFET splitter) 1 negative terminal : -BAT Each bank can be used individually and delivers the rated current
Nominal current (+/-7%) @ rated power	30A/855W
Charging curve	Charging curve selection by keypad, Bluetooth application or CAN-BUS communication
Battery type	Sealed lead, Gel, AGM as factory setting - Other selections by pushbutton : calcium lead, LiFePO4, DC power-supply mode, etc. Specific request on demand
Automotive fuses mounted in series in minus pole -BAT	4 x 30A/32V
Electrical protections	
	Against transient input overvoltage by varistor (not covered by warranty) / Against output polarity reversal by fuses / Against abnormal overheating
Environement	
Sound level	0 dB
Bluetooth	Low energy bluetooth (BLE) - Power: +9dBm (frequency: 2412-2484MHz)
Standards	
CE / EMC	NF EN61000-6-1, NF EN61000-6-2
Communication	
	CAN-Bus / Low Energy Bluetooth (BLE)
Option	
Temperature probe	Output voltage compensation -36mV/°C (ref: 2.8m: STP-UNI-2.8 or 5m: STP-UNI-5.0)

[1] Overall battery capacity recommended for lead-type batteries, C/10. For Lithium batteries, C/3, consult us if needed.
[2] Consult CRISTEC for any use at 115VAC/60Hz
* Planned avaibility 2025

SHORE-POWER DISTRIBUTION CHARGERS

Example of installation

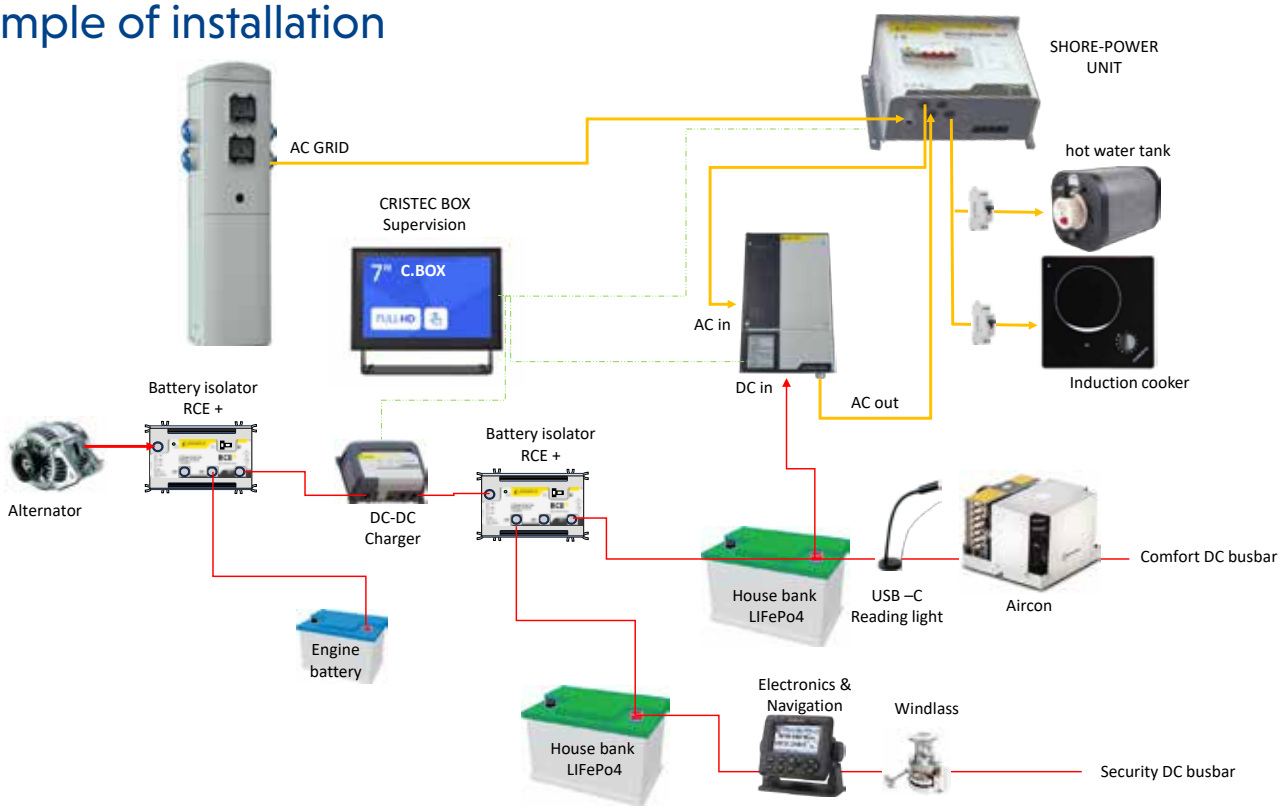

Choosing a charging curve on the **UEPOWER+**

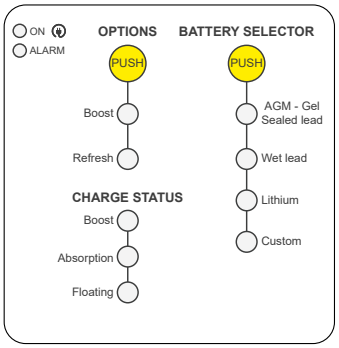

With the PUSH button of the BATTERY SELECTOR you can choose the battery technology and its associated charging curve. If you use the Bluetooth Cristec Connect application on your mobile phone or tablet and choose a different charging curve the CUSTOM led switches on.

When choosing any battery technology above, the BOOST charging curve from the OPTIONS menu is selected by default. When the PUSH button is pressed again, you select the **5-step charging curve** with BOOST and REFRESH as follows :

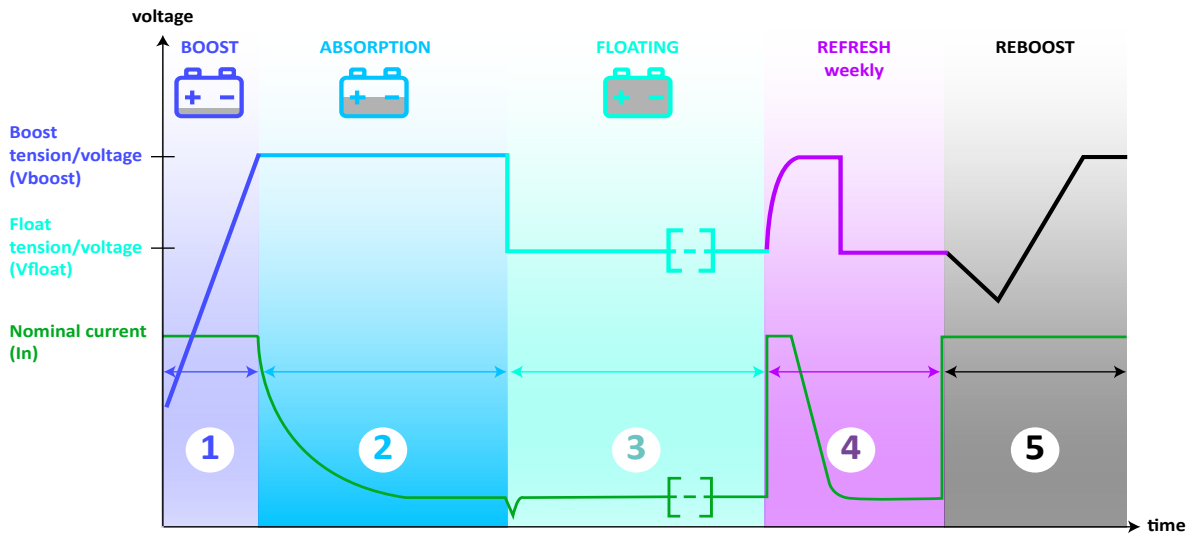

5-step charge curve IUoU with automatic weekly refresh

If no OPTIONS are selected (no green led is lit on the OPTIONS menu) the charging curve starts with the Float voltage.

UEPOWER

3 Warranty 3 years

9.4/10 Repairability index

3 independent outputs

Presentation

The CRISTEC UEPOWER shore-power units combine a battery charger and an electrical panel in a single enclosure.
The AC network protection is provided by a 16A/30mA bipolar main circuit breaker and 10A MCB.

Silent operating

CRISTEC offers shore-power units with natural convection (without fan).
This specificity gives them a completely silent operation and an optimized lifespan.

3 independent outputs

The shore-power units have 3 independent charger outputs, including one dedicated to the engine battery.

Worldwide use

Automatic detection of power supply network, from 90 to 265VAC and from 47 to 65Hz. You do not have to care about the AC power grid and genset voltage.

Remote control

CAN-Bus available in option.

5-stage charging profile

- **Boost**: charges batteries to 80% of full charge
- **Absorption**: slowly completes remaining charge to 100%
- **Floating**: maintains battery charge
- **Automatic refresh**: prevents sulphation and revitalizes batteries, selectable by keypad pushbutton
- **Reboost**: new automatic Boost phase if DC consumers and the state of batteries so require.

Adaptative charging

Custom-made and simultaneous recharge either 3 or 4 battery banks.
UEPOWER+ shore-power units are compatible with all types of batteries:
- Opened classic lead
- Sealed, gel or AGM
- Spiral sealed
- Lithium Iron Phosphate (LiFePO4) with BMS

SHORE-POWER DISTRIBUTION CHARGERS UEPOWER

12V

	AC electrical panel			Battery charger			
Model	Main RCD	AC outputs	10A circuit breakers	Voltage	Nominal current	Recommended battery bank*	Number of outputs
UEYPO/12-16/2D	30mA / 16A		2	12V	16A	100-200Ah	3
UEYPO/12-16/3D			3				
UEYPO/12-16/4D			4				
UEYPO/12-25/2D			2	12V	25A	200-300Ah	3
UEYPO/12-25/3D			3				
UEYPO/12-25/4D			4				

Model	UEPOWER 12V-16A	UEPOWER 12V-30A
Casing		
Material	Frame and cover of EZ steel / Anodized aluminium heatsink	
Painting	RAL 7015 satin slate gray frame / RAL 7047 satin gray cover	
Dimensions (length, height, depth)	389 x 214,5 x 137,2 mm (15.3 x 8.4 x 5.3 in)	
Weight	4.4Kg (8.8lbs)	
Protection factor	IP20	
Input		
Voltage	115VAC [1] / 230VAC +/-15% single-phase	
Frequency	50/60Hz [1]	
Current consumed 230/115VAC	1/2A	2/4A
Efficiency	92.8% in 240VAC & 91% in 120VAC	
Output		
Number of battery banks	3 separate positive terminals: +BAT E, +BAT 1 and +BAT 2 (integrated MOSFET splitter) 1 negative terminal : -BAT Each bank can be used individually and delivers the rated current	
Nominal current (+/-7%) @ rated power	20A/276W	30A/356W
Charging curve	Charging curve selection by keypad or CAN-BUS communication	
Battery type	Sealed lead, Gel, AGM as factory setting - Other selections by pushbutton : calcium lead, LiFePO4, DC power-supply mode, etc. Specific request on demand	
Automotive fuses mounted in series in minus pole -BAT	1 x 30A/32V	2 x 30A/32V
Electrical protections		
Against transient input overvoltage by varistor (not covered by warranty) / Against output polarity reversal by fuses / Against abnormal overheating		
Environement		
Sound level	0 dB	
Standards		
CE / EMC	NF EN61000-6-1, NF EN61000-6-2	
Communication		
	CAN-Bus in option	
Option		
Temperature probe	Output voltage compensation -18mV/°C (ref: 2.8m: STP-UNI-2.8 or 5m: STP-UNI-5.0)	

[1] Consult CRISTEC for any use at 115VAC/60Hz
* Overall battery capacity recommended for lead-type batteries, C/10. For Lithium batteries, C/3, consult us if needed.

SHORE-POWER DISTRIBUTION CHARGERS

Typical installation

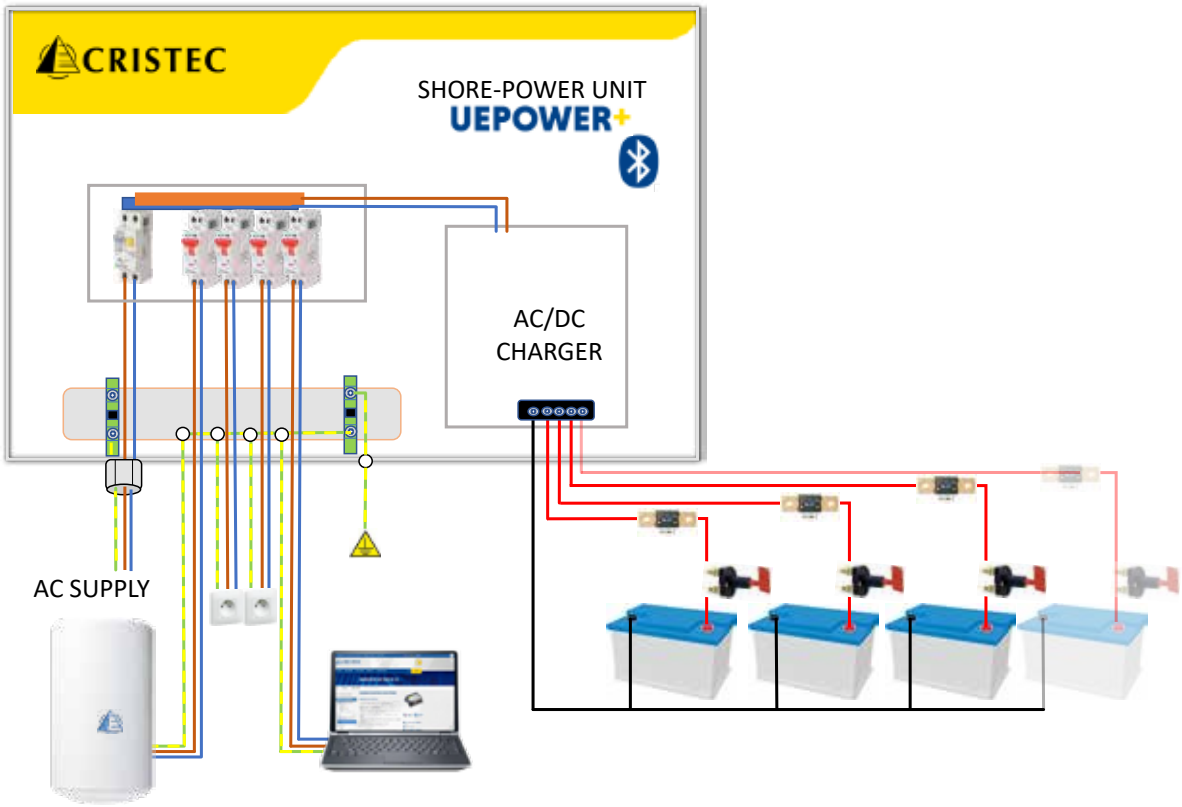

OPTIONS

	Category	YPOWER+			YPOWER		UEPOWER+	UEPOWER	HPOWER	DCPOWER+	MPPTPOWER+
	Model	12-20 12-30 24-15	12-40	12-60	12-16 12-25 12-40 12-60	24-12 24-20 24-30					
1	2.4" Remote touch-screen control panel	-			-		-	-	UNI-DISPLAY-R		
2	External varistor for unstable AC Mains	-			VAR-AC		-	VAR-AC		-	
3	Temperature probe 5m	STP-UNI-5.0									
	Temperature probe 2.8m	STP-UNI-2.8									
4	Alternator temperature probe	-								STP-ALT-2.4	-
5	HPOWER parallelization kit	-							KIT-HPO-LINK	-	
6	AC input connector [1]	30024064					-	30024064	-		
7	DC 3 outputs connector [1]	30033787	-		30033787[3]		-				
8	DC 4 outputs connector [1]	-	30038370	30037678			-				
9	Parallelization kit 1M[2]	SEEL030319	-		SEEL030319		-			SEEL030319	
	Parallelization kit 3M[2]	SEEL030320	-		SEEL030320		-			SEEL030320	
10	Microfit cap 3.0 120 ohms[2]	30037624	-		30037624		-			30037624	
11	MICROFIT - MICRO C male cable	001600			-		001600	-	001600		
12	AC european socket 250VAC 16A 2PH+N	-					001797		-		
13	Ground Fault Circuit Interrupters (GFCI) 16A	-					001075		-		
14	Breakers MCB 10A	-					000845		-		

[1] for cable harness external to the charger
[2] parallel mounting via CAN-BUS to increase the current
[3] Except YPOWER 12V/60A model, reference 30033788

1 

2.4" remote color touch-screen control panel

UNI-DISPLAY-R : also available integrated on the front panel, please consult us

2 

External varistor for unstable AC Mains

3 

Temperature probe

For charger output voltage compensation
(12V : -18mV/°C • 24V : -36mV/°C)
2.8 meters long: STP-UNI-2.8
5 meters long: STP-UNI-5.0

4 

Alternator temperature probe

This option is fitted with :
- 1 self-tapping screw
- 2 cable ties
- 1 mechanical adaptation part
- 1 probe of 20cm long with a connector MC 1.5/2 ST-3.51
- 1 cable of 2,2 m with 1 connector MC 1.5/2 ST-3.5 and 1 IMC 1.5/2 ST-3.81

5 

HPOWER parallelization kit

The parallelization kit KIT-HPO-LINK is intended to connect two HPOWER battery chargers of the same voltage rating (12, 24 or 48V). The parallel operation adds charge currents of each battery charger.
The charge process is unique and controlled by the master.

6 

AC input connector

7 

DC 3 outputs connector

8 

DC 4 outputs connector

9 

Parallelization kit

Microfit cable 3.0 - 6 contacts - 2 Microfit caps 3.0 120 ohms)

10 

Microfit cap

11 

MICROFIT/MICRO-C CABLE

0,2m MICROFIT/MICRO-C male cable to link with NMEA 2000 systems. Already compliant and tested with : SIMRAD, B & G & NOVA navigation systems.

12 

AC european socket

250VAC 16A 2PH+N

13 

Ground Fault Circuit Interrupters (GFCI)

16A 30mA 10kA AC

14 

Breakers MCB

10A 4,5kA PH+N

Pogo 44 © Jakez 2020

DC-AC inverters

KERSINE+

SOLO

Pure sinewave

Up to 3600VA

50°C

Temperature withstand

Bluetooth

Parallel mounting

Lightweight < 7kg

KERSINE+

3 Warranty 3 years

9.4/10 Repairability index

Bluetooth

Operating principle

Developed for professional use, in harsh environments, KERSINE inverters offer up to 3,6kVA power. Thanks to their **H**igh **F**requency technology they are lightweight and they offer compact dimensions which are suitable for the widest range of applications.
Optional built-in relay board allows to switch automatically to AC shore-power or genset.

High power

They are powerful enough to sustain high-power AC devices consumption (microwaves oven, coffee machine, hair dryer, etc.).

Easy and robust installation

Installation is simple thanks to the supplied AC output cable. Because of its HF technology Kersine+ is very light (3 or 4 times lighter than low frequency technology).

No derating

They deliver up to 3.6kVA, regardless of the type of device connected.

CAN-Bus interface

A serial CAN-Bus interface allows control and configuration of KERSINE+ inverters in real time.

Pure sinewave

Thanks to their sinusoidal signal without harmonic distortion, your devices are protected and energy loss is reduced.

Parallel mounting

The inverters can be parallel-mounted to increase the output power to a maximum of 14kVA (4 units). Three-phase operation is also possible (with 3 units). Planned avaibility 2025.

30A built-in relays (option)

KERSINE+ inverters have built-in alarms and protections, as well as relays (30A) which ensure, in particular, the transfer of AC inputs, as well as the automatic earth relay (mobile applications). Planned avaibility 2025.

Bluetooth interface

KERSINE+ is equipped with a Bluetooth Low Energy (BLE), variant of "classic" Bluetooth. The major advantage of BLE is its low power consumption as it consumes half the power of a classic Bluetooth. Planned avaibility 2025.

KERSINE+ DC-AC INVERTERS

230VAC

Part Number	KERS12-230/3600	KERS12-230/2400	KERS24-230/3600	KERS24-230/2400	KERS48-230/3600	KERS48-230/2400
Model*	12VDC 3600VA	12VDC 2400VA*	24VDC 3600VA	24VDC 2400VA*	48VDC 3600VA*	48VDC 2400VA*
DC Input						
Voltage	10.5V - 16V		21V - 32V		42V - 64V	
Maximum current	300A		150A		75A	
On Mode @ No load Mode	12W					
Efficiency	92%					
Input fuse	400A		200A		100A	
AC Output						
Voltage range	230VAC +/- 5%					
Frequency selectable	50/60Hz					
Rated Power	3000W	2000W	3000W	2000W	3000W	2000W
Peak power 3s	4500W	3600W	4500W	3600W	4500W	3600W
Earth relay	1 x 30A					
Waveform	Sinusoidal THD < 3%					
Parallel mounting	Up to 4 units in parallel mode / 3 for three-phase					
AC fuses (phase and neutral)	25A					
AC Intput						
Voltage range	230VAC +/- 5%					
Frequency selectable	50/60Hz					
Rated Power at 50°C (122°F)	3 x 30A (1 double and 1 single)					
Environment						
Cooling	Electric fans controlled in T° and current					
Operating temperature	From -20°C to +50°C (-4°F to 122°F), derating from 50°C (122°F)					
Storage temperature	From -40°C to +70°C (-40°F to 158°F)					
Relative humidity	up to 70% (95% without condensation)					
Bluetooth	Low energy bluetooth (BLE) - Power: +9dBm (frequency: 2412-2484MHz)					
Casing						
Length, height, depth / Weight	270 x 360 x 130mm (10.6 x 14.2 x 5.1 in) / 6.8kg (13.2 lb)					
Protection factor	IP23					
Electronic card protection	Water-repellent varnish (marine environment)					
Communication port	CAN-Bus / Bluetooth*					
Standards						
CE declaration of conformity	Available on request					
CE / EMC	EN61204-3					
CE / Security - Others	EN60335-2-29 - E marking (pending)					
Protections						
Input	Reverse Polarity (fuses) / Under voltage / Over voltage					
Output	Short-circuitry / Overload / Over Temperature					
Options						
	Relay board : P/N: KERS-RELAY					

* Planned avaibility 2025

KERSINE+ DC-AC INVERTERS

115VAC

Part Number	KERS12-115/3600	KERS12-115/2400	KERS24-115/3600	KERS24-115/2400	KERS48-115/3600	KERS48-115/2400
Model*	12VDC 3600VA*	12VDC 2400VA*	24VDC 3600VA*	24VDC 2400VA*	48VDC 3600VA*	48VDC 2400VA*
DC Input						
Voltage	10.5V - 16V		21V - 32V		42V - 64V	
Maximum current	300A		150A		75A	
On Mode @ No load Mode	12W					
Efficiency	92%					
Input fuse	400A		200A		100A	
AC Output						
Voltage range	120VAC +/- 5%					
Frequency selectable	50/60Hz					
Rated Power	3000W	2000W	3000W	2000W	3000W	2000W
Peak power 3s	4500W	3600W	4500W	3600W	4500W	3600W
Earth relay	1 x 30A					
Waveform	Sinusoidal THD < 3%					
Parallel mounting	Up to 4 units in parallel mode / 3 for three-phase					
AC fuses (phase and neutral)	25A					
AC Intput						
Voltage range	120VAC +/- 5%					
Frequency selectable	5					
Rated Power at 50°C (122°F)	3 x 30A (1 double and 1 single)					
Environment						
Cooling	Electric fans controlled in T° and current					
Operating temperature	From -20°C to +50°C (-4°F to 122°F), derating from 50°C (122°F)					
Storage temperature	From -40°C to +70°C (-40°F to 158°F)					
Relative humidity	up to 70% (95% without condensation)					
Bluetooth	Low energy bluetooth (BLE) - Power: +9dBm (frequency: 2412-2484MHz)					
Casing						
Length, height, depth / Weight	270 x 360 x 130mm (10.6 x 14.2 x 5.1 in) / 6.8kg (13.2 lb)					
Protection factor	IP23					
Electronic card protection	Water-repellent varnish (marine environment)					
Communication port	CAN-Bus / Bluetooth					
Standards						
CE declaration of conformity	Available on request					
CE / EMC	EN61204-3					
CE / Security - Others	EN60335-2-29 - E marking (pending)					
Protections						
Input	Reverse Polarity (fuses) / Under voltage / Over voltage					
Output	Short-circuitry / Overload / Over Temperature					
Options						
	Relay board : TBA					

* Planned avaibility 2025

Principle schematic

Kersine stand alone

Kersine with relay board option

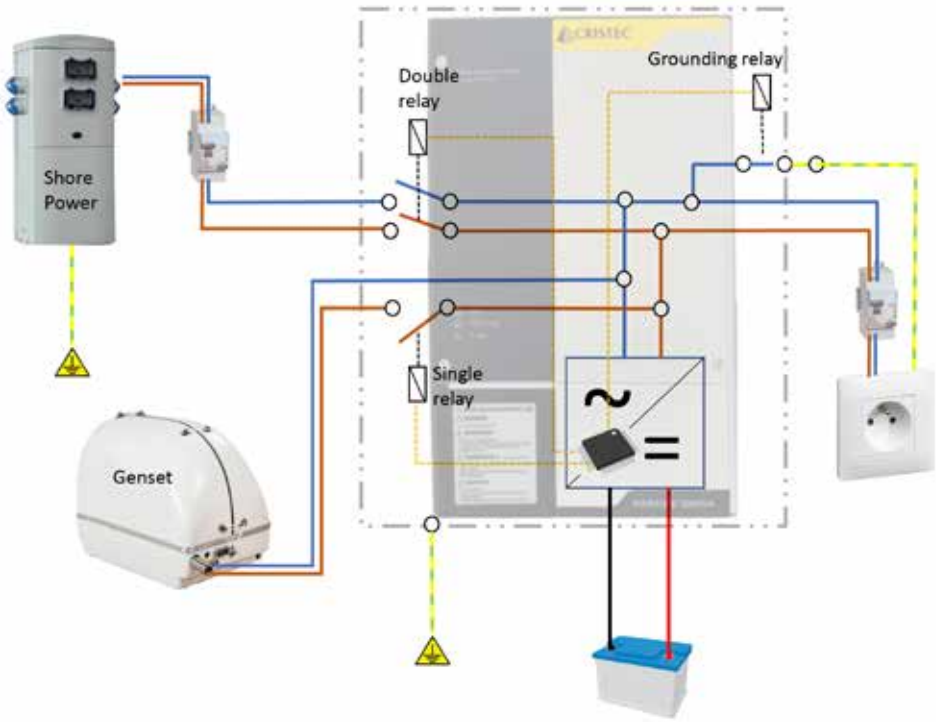

AC output is powered directly by shore power input. In case of grid power shortage, Kersine switches to genset AC input as main supply. If no input is available from shore and genset, Kersine switches to DC input. Grounding relay is switched off when input comes from shore power.

Parallel mode and 3-phase voltage mode, CAN address

Kersine can handle up to 4 units for parallel mode. The goal is to provide up to 14kVA of power. You can also connect 3 units to provide a 3-phase voltage architecture. In case of parallel mode or 3-line voltage mode, it is mandatory to connect all pure sine wave inverters together with RJ45 standard network cables and CAN-Bus cables.

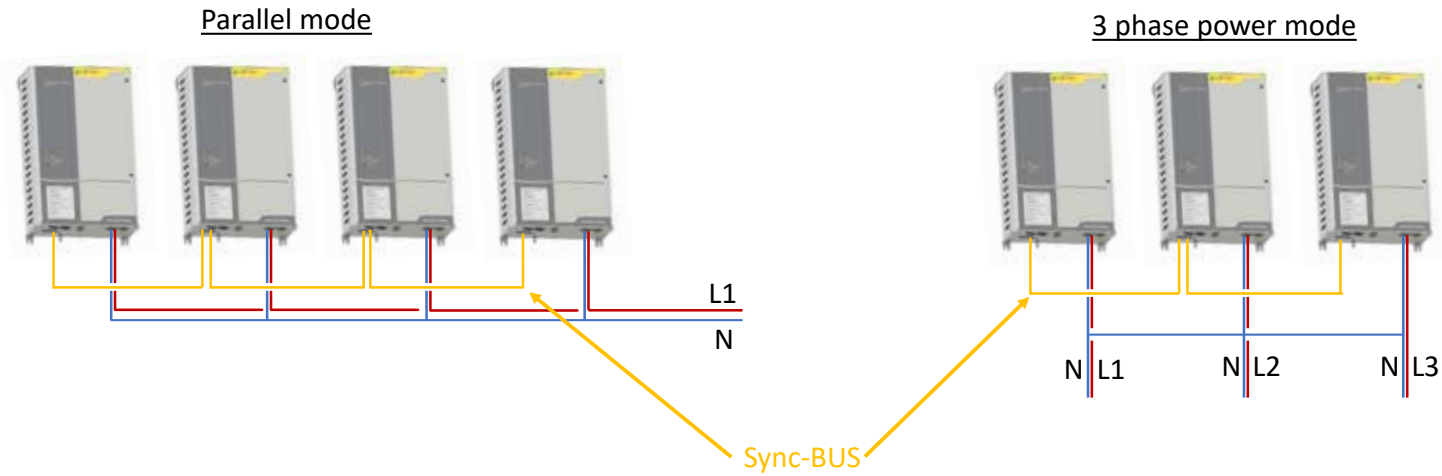

Installation example

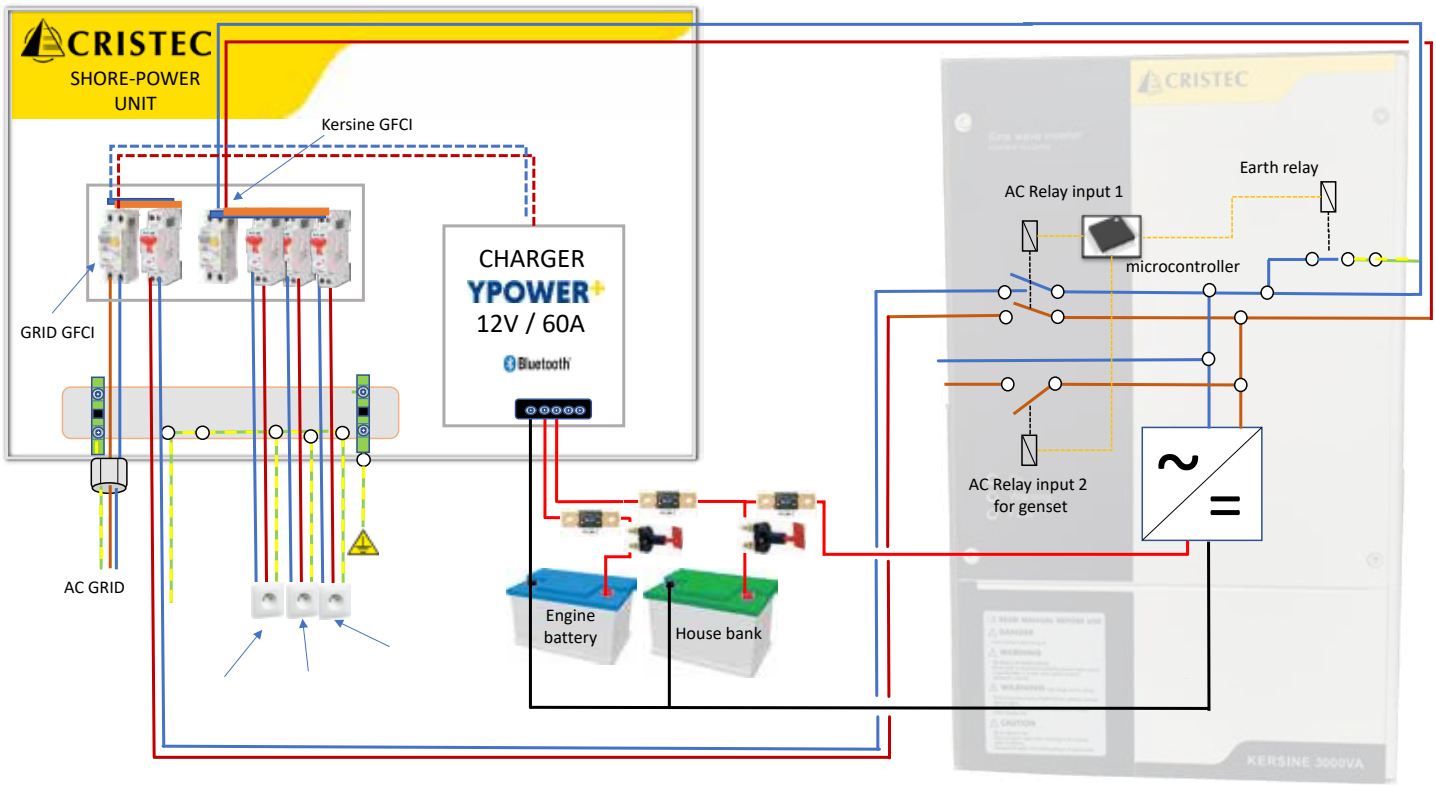

SOLO

Warranty 2 years

9.4/10 Repairability index

Presentation

The aim of inverters is to convert batteries direct voltage (12, 24 or 48VDC) into high quality 230VAC/50Hz alternating voltage which can be used for all electrical appliances (115VAC/60Hz or 230VAc/60Hz on request). The SOLO digital sinewave inverter is the ultimate solution fulfilling the highest requirements in terms of comfort, safety and reliability. Solo converters are Low Frequency technology which provide simplicity and high peak power overload.

Significant overload

SOLO inverters offer significant overload capacity for starting surges: more than 2 times the nominal power during 5 seconds.

Pure sinewave

Thanks to their sinusoidal signal without harmonic distortion, your devices are protected and energy loss is reduced.

High efficiency

SOLO inverters have high efficiency (>93%) and low stand-by consumption (around 1%).

High reliability

They meet the highest requirements in terms of comfort, safety and reliability in a limited size and weight.

Battery protection on stop

SOLO have a deep discharge battery protection that shutoff the inverter when battery voltage reaches 87% of nominal. It automatically restarts when nominal voltage is back.

SOLO DC-AC INVERTERS

12V

Part Number	SEEL006054B	SEEL006056B	SEEL006072	SEEL006088
Model*	12V/200W	12V/400W	12V/800W	12V/2000W
Technical features				
Battery tension	12VDC			
Input voltage	10.5 - 16VDC			
Nominal power	200W	400W	800W	2000W
Power 30 minutes @ 25°C (77°F)	275W	500W	1000W	2100W
Power 5 secondes @ 25°C (77°F)	450W	1000W	2200W	5000W
Standby / Idle power	0.3 /2.4W	0,4 /4.6W	0,7/10W	0.7/16W
Maximum efficiency	93%	93%	93%	92%
Output voltage	Sine wave 230VAC +/-5% (115V +/-5%)			
Frequency	50 Hz +/- 0.05 % (60 Hz +/-0.05%)			
Cooling (forced ventilation)	From 45° C (113° F)			
Overheating protection	Yes			
Overload protection				
Short circuit protection				
IP protection index	IP 30			IP 20
Cos φ max	0.1-1			
Casing				
Dimensions	163 x 142 x 84 mm (6.4 x 5.5 x 3.3 in)	240 x 142 x 84 mm (9.4 x 5.5 x 3.3 in)	428 x 142 x 84 mm (16.8 x 6.4 x 3.3 in)	399 x 273 x 84 mm (15.7 x 10.7 x 3.3 in)
Weight	2.4 Kg (4.4 lb)	4.5 Kg (8.8 lb)	8.5 Kg (17.6 lb)	19 Kg (41.8 lb)
Options				
Remote control with 5 meters cable switch P/N: SEEL007130	No		Yes	
Standby system (1 to 20W)	No	Yes	Yes	

24V

Part Number	SEEL006050B	SEEL006052B	SEEL006074	SEEL006090
Model*	SOLO 24V 300W	SOLO 24V 500W	SOLO 24V 1000W	SOLO 24V 2000W
Technical features				
Battery tension	24VDC			
Input voltage	21 - 32VDC			
Nominal power	300W	500W	1000W	2000W
ower 30 minutes @ 25°C (77°F)	350W	600W	1300W	2400W
Power 5 secondes @ 25°C (77°F)	650W	1200W	2800W	5200W
Standby / Idle power	0.5/3.5W	0.6 /7.2W	1.2/13W	1.2/16W
Maximum efficiency	94%	94%	94%	94%
Output voltage	Sine wave 230V +/-5% (120V +/-5%)			
Frequency	50 Hz +/- 0.05 % (60 Hz +/-0.05%)			
Cooling (forced ventilation)	From 45° C (113° F)			
Overheating protection	Yes			
Overload protection				
Short circuit protection				
IP protection index	IP 30			IP 20
Cos φ max	0.1-1			
Casing				
Dimensions	163 x 142 x 84 mm (6.4 x 5.5 x 3.3 in))	240 x 142 x 84 mm (9.4 x 5.5 x 3.3 in)	428 x 142 x 84 mm (16.8 x 6.4 x 3.3 in)	399 x 273 x 84 mm (15.7 x 10.7 x 3.3 in)
Weight	2.6 Kg (4.6 lb)	4.5 Kg (8.8 lb)	8.5 Kg (17.6 lb)	18 Kg (39.8 lb)
Options				
Remote control with 5 meters cable switch P/N: SEEL007130	No		Yes	
Standby system (1 to 20W)	No	Yes	Yes	

SOLO DC-AC INVERTERS

48V

Part Number	SEEL006954	SEEL008368
Model*	SOLO 48V 300W	SOLO 48V 500W
Technical features		
Battery tension	48VDC	
Input voltage	42 - 64VDC	
Nominal power	300W	500W
Power 30 minutes @ 25°C (77°F)	400W	700W
Power 5 secondes @ 25°C (77°F)	1000W	1400W
Standby / Idle power	1.1 /5.2W	1.5/12W
Maximum efficiency	94%	94%
Output voltage	Sine wave 230V +/-5% (120V +/-5%)	
Frequency	50 Hz +/- 0.05 % (60 Hz +/-0.05%)	
Cooling (forced ventilation)	From 45° C (113° F)	
Overheating protection	Yes	
Overload protection		
Short circuit protection		
IP protection index	IP 30	
Cos φ max	0.1-1	
Casing		
Dimensions	163 x 142 x 84 mm (6.4 x 5.5 x 3.3 in)	240 x 142 x 84 mm (9.4 x 5.5 x 3.3 in)
Weight	2.6 Kg (4.8 lb)	4.5 Kg (8.8 lb)
Options		
Remote control with 5 meters cable switch P/N: SEEL007130	No	
Standby system (1 to 20W)	No	Yes

EKREM SERIF EGELI

Galvanic isolation

ISOLATION TRANSFORMERS

GALVANIC ISOLATORS

Automatic soft-start

50°C

Temperature withstand

Parallel connection

Automatic vs manual

IT3600

Warranty 3 years

8.9/10 Repairability index

GALVANIC ISOLATION

Presentation

The **IT3600** range of CRISTEC isolation transformers function is to provide a galvanic isolation between the boat on-board power supply network and the shore. This separation prevents ground current circulation between the supply and distribution lines, which are the source of corrosion on the metal parts of a vessel in contact with sea water (phenomenon similar to electrolysis). This isolation function is made of a toroidal transformer with dual primary and secondary winding.

Automatic soft-start

The system has an automatic soft-start function to limit inrush current when the device is switched on, avoiding inadvertent tripping of shore network protections (premagnetising circuit).

Parallel connection

2 isolation transformers can be connected in parallel to reach a maximum power of 7200W (32A @ 230VAC). Please contact us for advice.

Thermal protection

The device has an automatic 2 speed ventilation system (half speed below 45 °C in the casing, full speed above 45 °C). A safety thermal sensor protects the equipment in case of overheating (too high ambient temperature, overloading, etc).

Automatic versus Manual

Automatic version of IT3600 isolation transformer automatically adapts to the grid voltage of the power source whether 115 or 230 VAC. Manual transformer requires the shift of internal cables. The grid frequency is not converted.

ISOLATION TRANSFORMERS

115V
230V

Part Number	IT-3600-M	IT-3600-A
Commutation	Manual	Auto
Input voltage	115/230VAC	
Output voltage	115/230VAC	
Frequency	50/60Hz	
Current	16/32A	
Power	3600W	
Soft-start	Yes	
Ambient temperature	From -20°C to +40°C (-4°F to 104°F)	
Ventilation	Half speed (reducing acoustic noise)	
Humidity	95% without condensation	
Transformer type	Toroidal	
Casing material	Steel with anti-corrosion treatment	
IP protection index	IP21	
Dimensions	h 400 x L 300 x l 200 mm (h 15.7 x L 11.8 x w l 7.8 in)	
Weight	24 kg (52.9 lb)	
Standards	IEC 60076	

Principle schematic

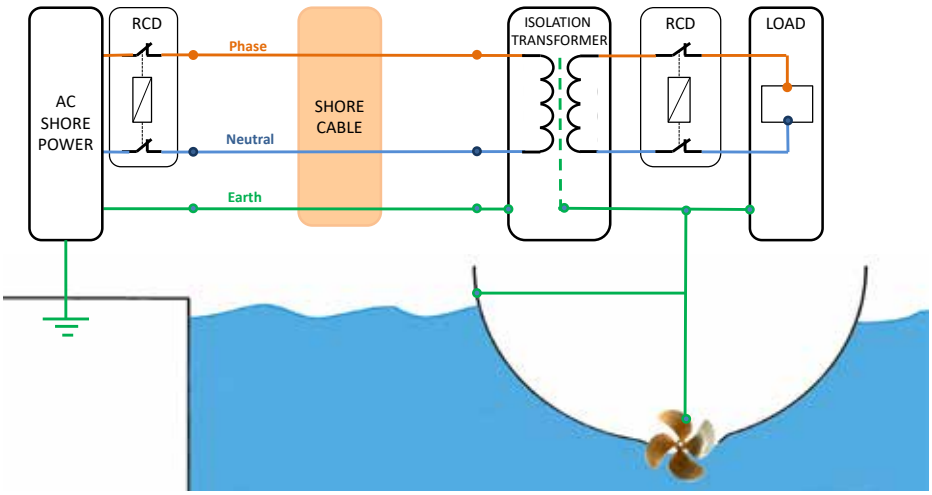

Parallel connection

GALVANIC ISOLATION

ISO+

Warranty 3 years

8.9/10 Repairability index

Presentation

The galvanic isolator prevents galvanic corrosion. It blocks the low-voltage DC currents that enter your boat via the shore power earth wire. These currents can cause corrosion to the boat's underwater metals, like the hull, propeller, shaft and so on.
The galvanic isolator consists of two diodes connected in antiparallel. The galvanic isolator is connected between the shore earth connection and the central earth point in the boat.
The power diodes in this configuration conduct electricity in both directions only when a certain threshold voltage is reached. The threshold voltage is approximately 1.4 VDC. The threshold voltage is higher than the galvanic potential difference between the various metals. In this way, no galvanic current can run. On the other hand, a higher earth fault voltage in the AC circuit will be allowed to pass through enabling the full functioning of a connected RCD.
The advantage of the galvanic isolator is its low weight and size, the disadvantage is that this unit relies on a good earth conductor. Another consideration is that galvanic corrosion can also take place through the neutral conductor, this in cases where the neutral conductor has been connected to earth through one of the electrical appliances on board, like a suppression filter or other appliances.

Part number*	ISO-16PL	ISO-32PL	ISO-64PL
Maximum current	16A	32A	64A
Peak current (20ms)	1600A	3200A	6400A
Connection	2 x M6		
Environment			
Cooling	Natural (Fanless)		
Operating temperature	From -25°C to +65°C (-13°F to 149°F)		
Protection	IP 65		
Material	Anodized aluminium and ABS		
Casing			
Length, height, depth	60 x120 x 150mm	60 x120 x 200mm	60 x120 x 250mm
Weight	1 kg	1,5kg	2 kg
Standards			
	ABYC A28 (pending)		

(*) Planned availability : 2025

115V
230V

Principle schematic

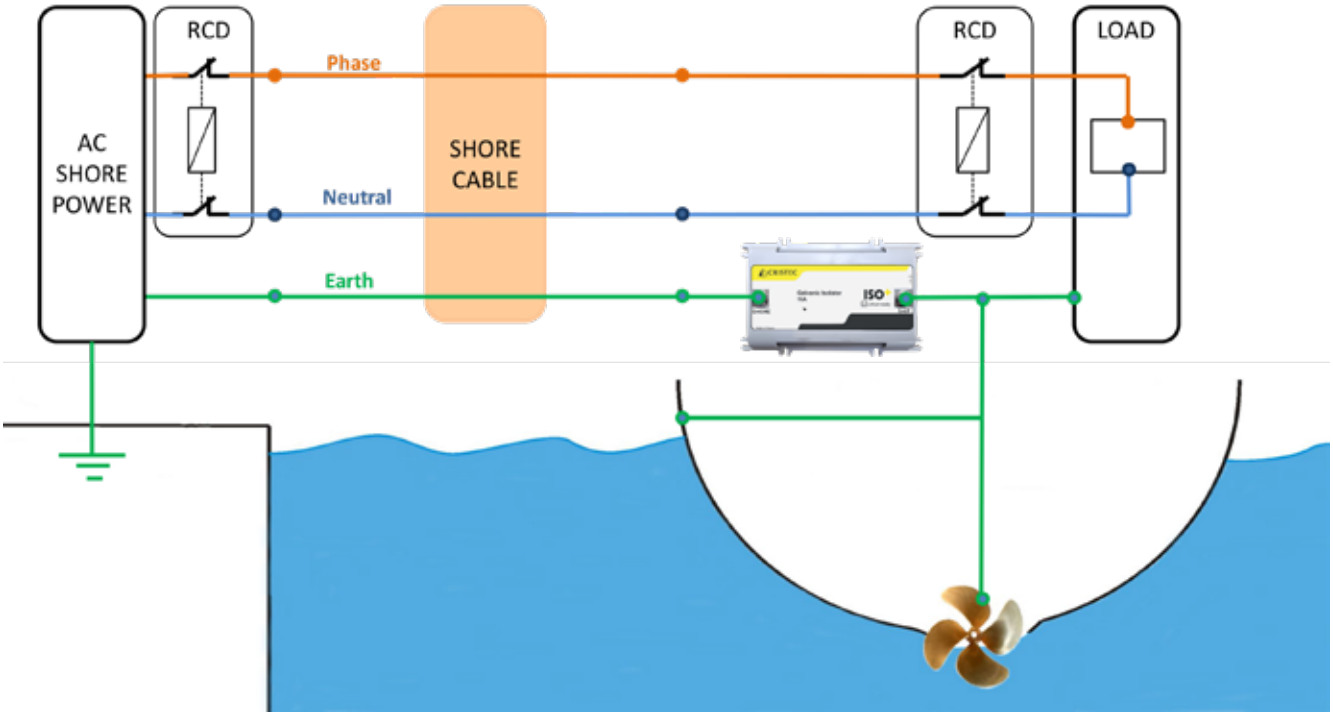

Typical installation

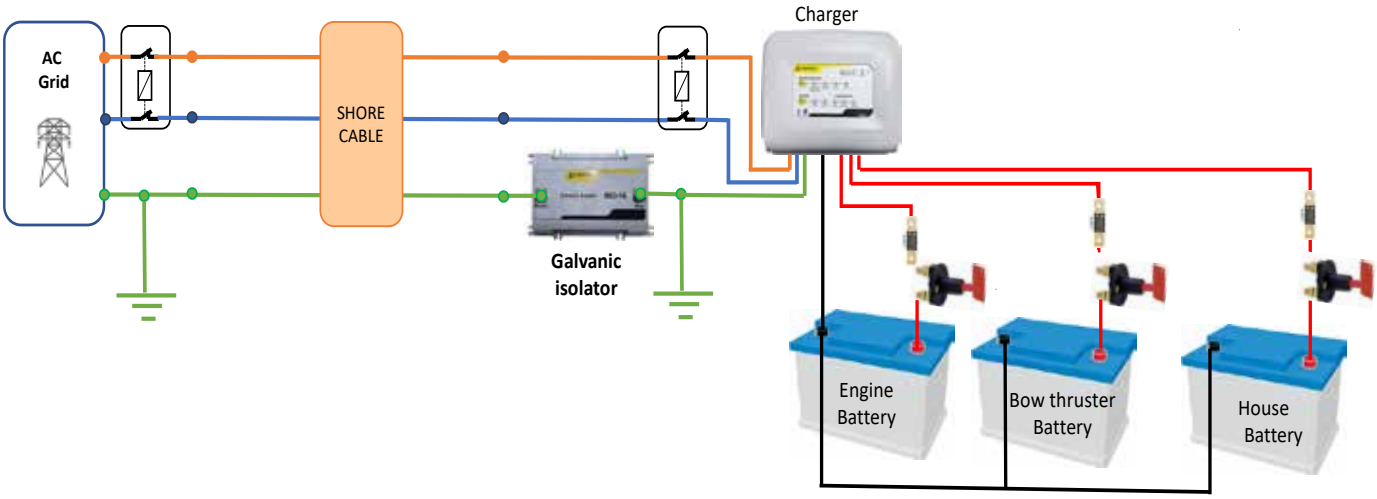

FRANCK GAZZOLA / UNDER THE POLE / ZEPPELIN NETWORK

Electronic battery isolators

RCE+

MOSFET technology

Voltage drop free

IG ready

Multi-voltage

Compact

RCE+

Warranty 3 years

8.9/10 Repairability index

Presentation

RCE+ battery isolators allow simultaneous charging of 2 or 3 batteries from one alternator without connecting the batteries together. Discharging the house battery for example will not result in discharging the starter battery.

MOSFFET technology

The technology used, based on **MOSFET** transistors, ensures negligeable voltage drop between the input and the outputs. This is a major advantage compared to a diode isolator.

Voltage drop free

Because there is no voltage drop due to **RCE+** isolator, there is no need to increase the output voltage of the alternator.

Multi-voltage

The isolator works with 12VDC and 24VDC voltage, and also allows the use of LiFePO4 (Lithium) batteries.

2 or 3 banks

The **RCE+** is used to split an input power source (alternator, solar regulator, hydrogenerator, etc.) to two or three consumers (batteries, consumers)

IGNITION ready

Some alternators need DC voltage on the + output to start charging. Inserting a battery isolator will prevent any return voltage from the battery and the alternator will not start. The **RCE+** splitters have an IG Input that will power the + output when switching on the engine.

Interchangeability

The **RCE+** is designed to be fully interchangeable with previous RCE without any modifications.

Item code*	Rated current	Number of outputs and Ø	IG connection (alternator stimulation)	Dimensions (w x h x d)	Weight
RCE80-1EM6-2SM6-PL	80A	2 x M6	yes	159 x 100 x 36 mm (6,25 x 3,93 x 1,41in)	0,45 kg (1 lb)
RCE120-1EM6-2SM6-PL	120A	2 x M6			
RCE180-1EM8-2SM6-PL	180A	2 x M6			
RCE180-1EM8-3SM6-PL		3 x M6			
RCE180-1EM8-2SM8-PL		2 x M8			
RCE180-1EM8-3SM8-PL		3 x M8			
RCE220-1EM8-3SM8-PL	220A	3 x M8			

* Former references will be delivered until previous RCE phase-out completed

12V
24V

Typical installation

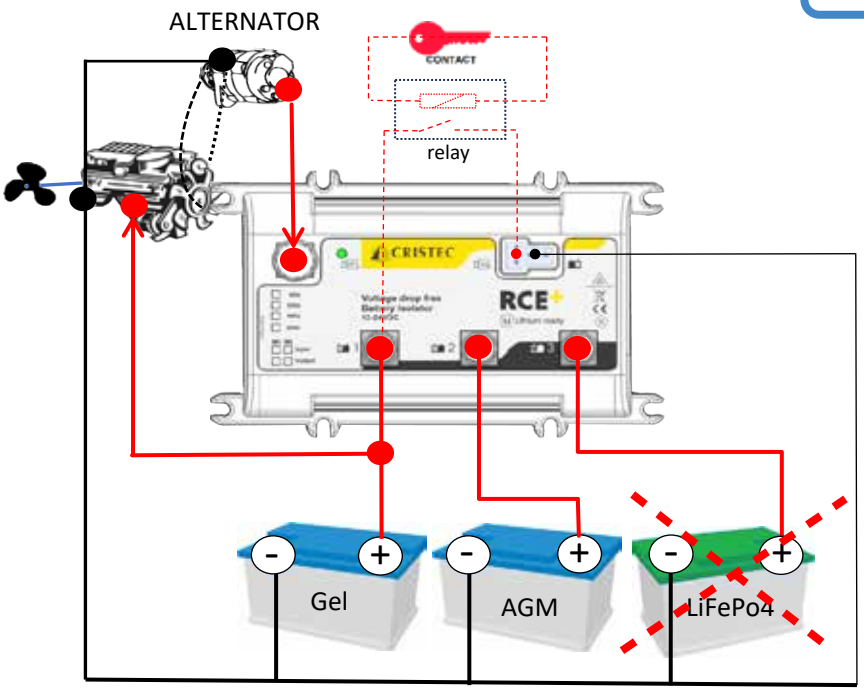

Mixing Lithium batteries with other technologies is not advised

Typical installation with DC conversion

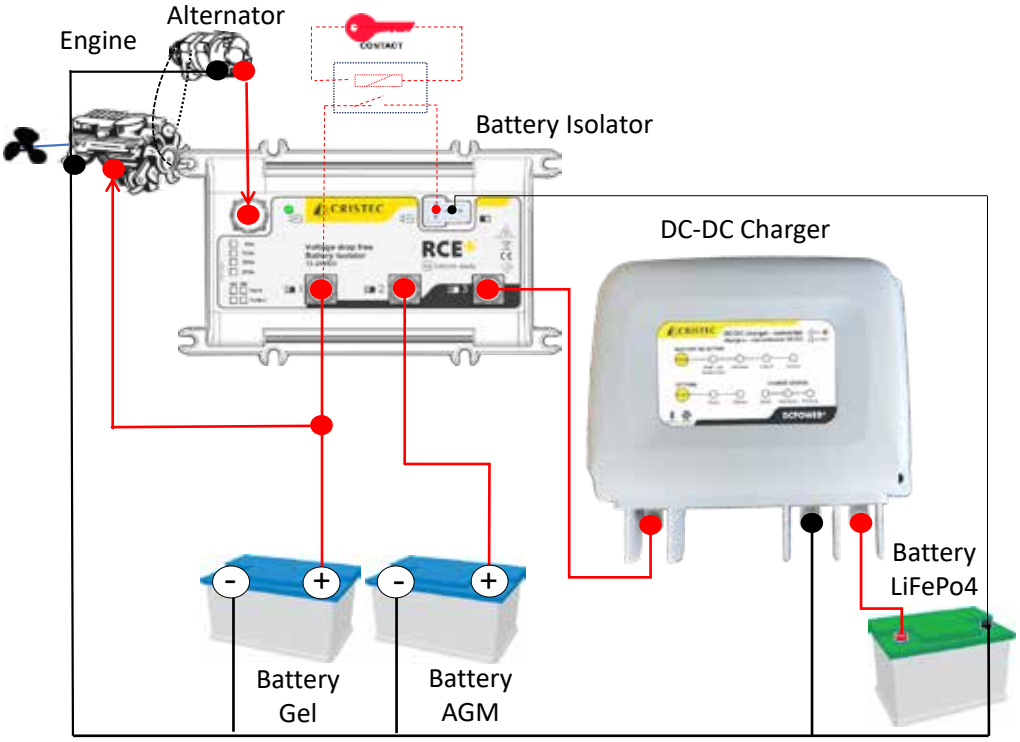

DCPower+ converts 12VDC from RCE+ isolator into 24VDC lithium battery voltage.

Typical installation with various types of batteries → see RCB+ P.69

Prestige Yachts - Range P630/P680S/P750 @Jerome_KELAGOPIAN

Smart battery coupler relays

RCB+

Adjustable current

Stabilized charge

Protected against reverse voltage

Compact

RCB+

Warranty 3 years

8.9/10 Repairability index

Presentation

With the increasing use of Lithium batteries (LiFePo4) for on-board electrical systems, compatibility between different battery types has become a major issue. Indeed, the cohabitation between starter batteries, often lead-acid, and lithium batteries for service requires specific management of energy flows, particularly during alternator operation.
RCB+ smart coupleur relay responds to this challenge by providing an efficient and secure connection between these two types of battery.
The device is capable of managing the current coming from the alternator, either 12 or 24VDC, up to 200A, by limiting it to the service battery, while protecting starter battery charge.

Part number	RCB-ADJ-120A	RCB-50PL	RCB-80PL
Maximum current to the house battery	Adjustable (50 to 120A)	50A	80A
Input			
Input voltage tolerance	From 8VDC to 32VDC		
Voltages	12VDC or 24VDC		
Protection current decoupling	200A +/-10%		
Output			
Both size Input & Output	2 x M8		
Ground isolation	>500VDC		
Maximum voltage drop	0.2VDC		
Environment			
Cooling	Natural (Fanless)		
Operating temperature	From -25°C to +65°C (-13°F to 149°F)		
Consumption	1.2mA@12V / 0.9mA@24V		
Casing			
Length, height, depth	159 x 100 x 36 mm (6,25 x 3,93 x 1,41 in)		
Weight	0,45kg (1 lb)		
Standards			
	RoHS Compliant / IEC60335-1 / ISO8846/SAE J1171 (Ignition protected)		

How RCB+ works :

One of the RCB+'s key features is its ability to limit the current flowing between the alternator and the service battery. Thanks to a setting wheel for the adjustable version, the user can adjust the current between 50 and 120A, guaranteeing flexibility according to the on-board system's needs.
It is recommended to retain around 30% of the alternator's capacity for the starter battery; for example, for a 110Ah alternator, the limit could be set at 70A for service bank. This fine-tuned management preserves the alternator from overload while optimizing the battery charge.

Compact and lightweight this unique compact relay is designed to be used in harsh environment. Its innovating technology based on low frequency switching mode offers stabilized output charge current and protection against reverse voltage to avoid damages on the alternator.
On the RCB-ADJ-120A model the black selector wheel of the encoder can be removed for safety or maintenance reason.In some cases RCB+ can replace a DC-DC charger.

Coupling and decoupling principle

12 VDC	Input		Output
Coupling	> 13V for more than 90s	&	>10,5V
	or		
	>13.6V for more than 30s	&	>10,5V
Decoupling	> 16V		
	or		
	< 12.4V for more than 10s		
	or		
	< 12.7V for more than 30s		

24 VDC	Input		Output
Coupling	> 26.0V for more than 90s	&	>21V
	or		
	>27.2V for more than 30s	&	>21V
Decoupling	> 32V		
	or		
	< 24.8V for more than 10s		
	or		
	< 15.4V for more than 30s		

12V
24V

Typical installation

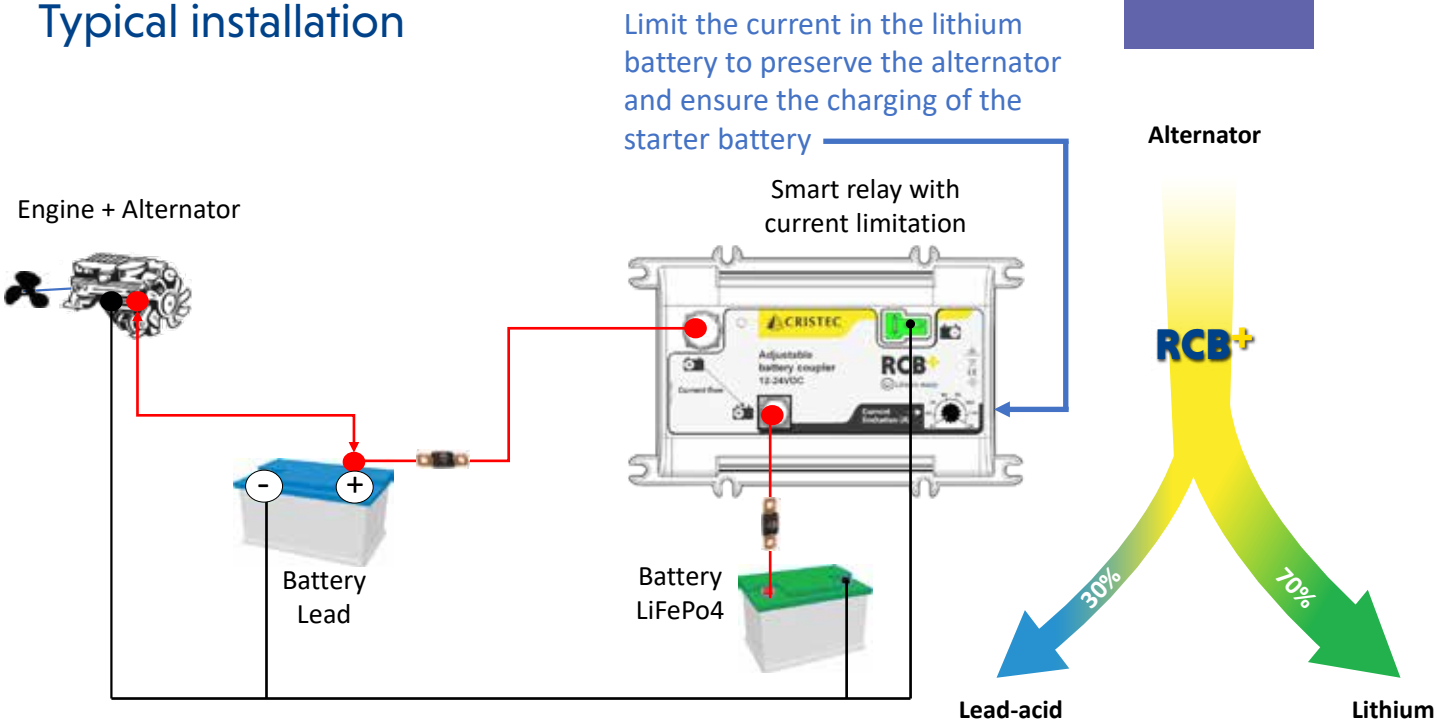

Typical installation with various types of batteries

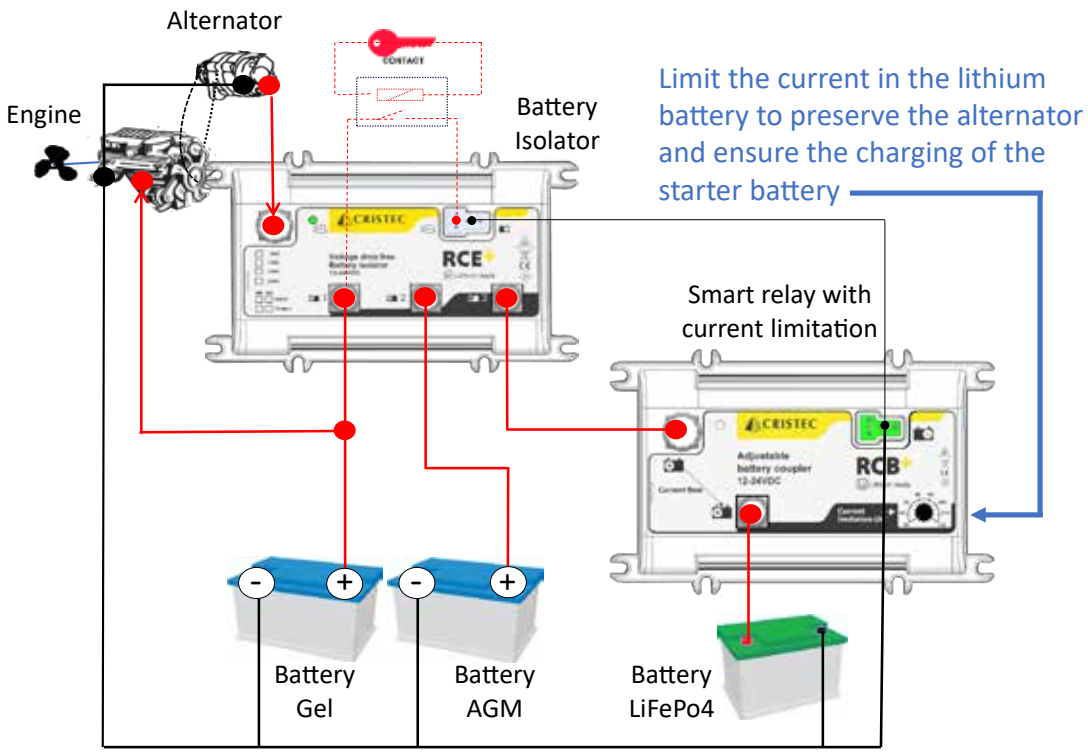

RCB+ smart relay limits current to the lithium battery from the RCE+ battery isolator.

*Nicols Philippe @Benoist Images Bleu Sud

Energy management

BAT-MON

FLEXCAN

Battery guard VLTG 70

Frequency converters FREQ

CAN-BUS interface

Independant device

Multi-voltage

Bluetooth

Protects against overload & overcharge

BAT-MON

Warranty 3 years

8.9/10 Repairability index

12V
24V
36V
48V

Shunt 300A

+

Battery monitor

ENERGY MANAGEMENT

Presentation

The battery monitor BAT-MON shows all relevant standard data such as voltage, current, remaining capacity and time of the service battery plus one additional voltage for starter or bow battery at the same time. Moreover the battery monitor BAT-MON records historic data of your battery such as average discharge depth, unavailable capacity and number of charge/discharge cycles.
An active high-precision 300A shunt unit is provided as standard for battery control. Two extra ones can be used as option. For each shunt used an additional voltage measurement is also available (i.e. bow-thruster battery).
Up to 3 battery banks or power generation (DC source) with 3 additional battery voltage readings. It operates at 12, 24, 36 and 48V and is suitable for all types of batteries, including Lithium.

Note : BAT-MON can monitor different battery voltages in a same installation if all negatives are common.

Why is BAT-MON essential?
Because it monitors:
- Starter and House bank batteries voltage in order to check that they are not faulty (too low voltage)
- House bank battery current to determine the remaining capacity of the installation which is essential for on board confort.

The shunt sends an alarm to the monitor (flashing and sound alarm) and can switch a relay to start a genset.
A CAN-BUS interface shunt is also available (reference FLEXCAN).

Part number	Description
BAT-MON-3.5-3	Battery monitor (screen + 1 shunt 300A)
Options	
SHUNT-300-3.5-3	Additional shunt 300A
SEEL017153	Wiring kit
STP-UNI-2.8	Temperature probe 2.8 meters
STP-UNI-5.0	Temperature probe 5 meters

Options

Wiring kit

Temperature probe 2.8 m STP-UNI-2.8

Temperature probe 5 m STP-UNI-5.0

BAT-MON

Examples of installation

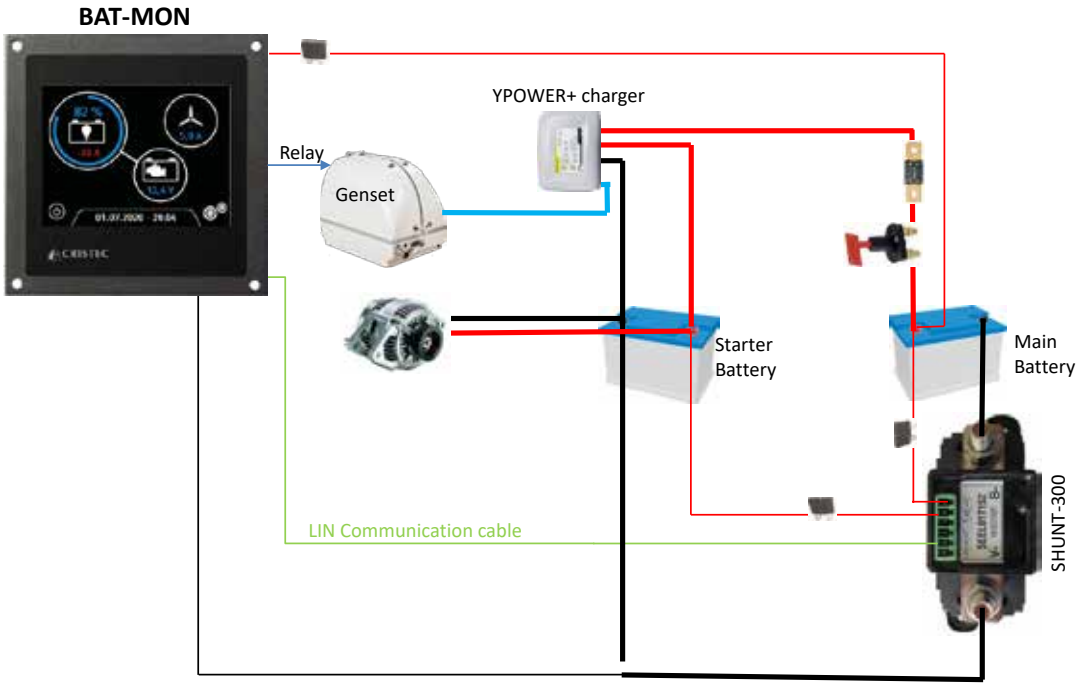

Shunt 300 measures the voltage of Starter battery and the voltage, current, temperature of the main battery. A low voltage of the Main battery can trigger a relay of the BAT-MON in order to start the genset.

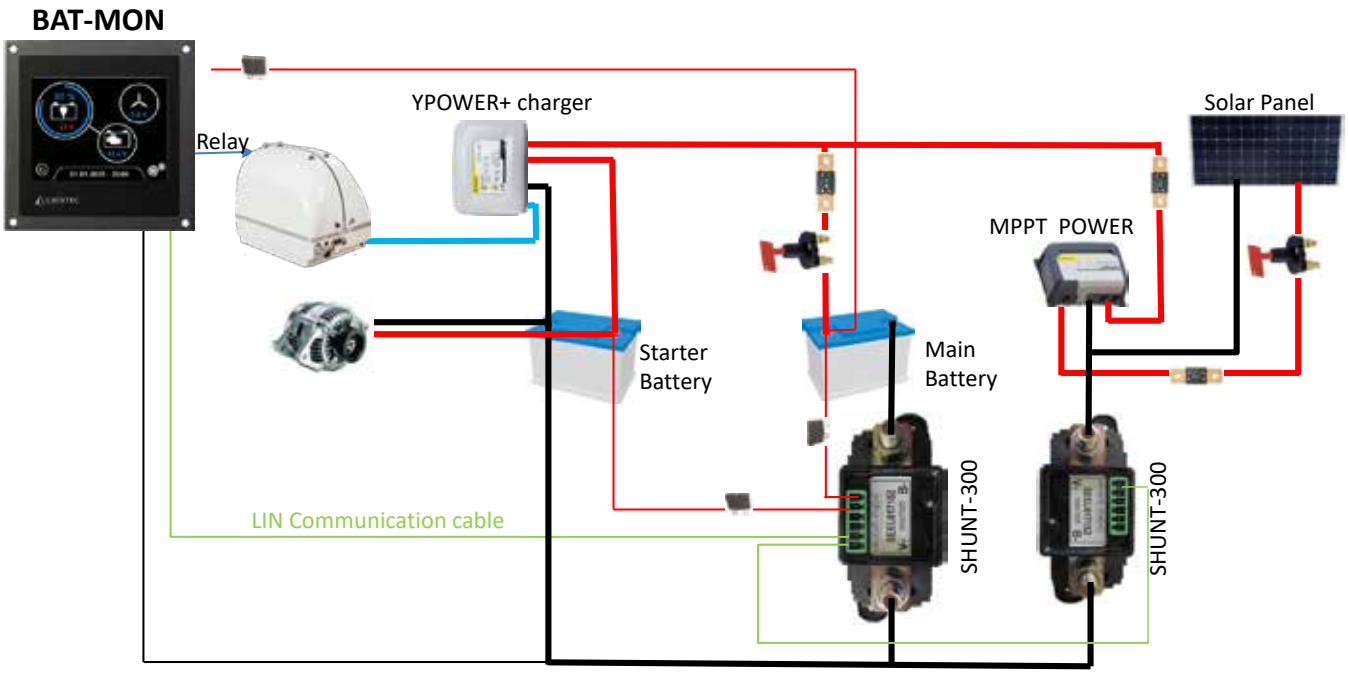

Shunts can be daisy chained to display on the same monitor the energy state of the whole installation

BAT-MON
Examples of installation

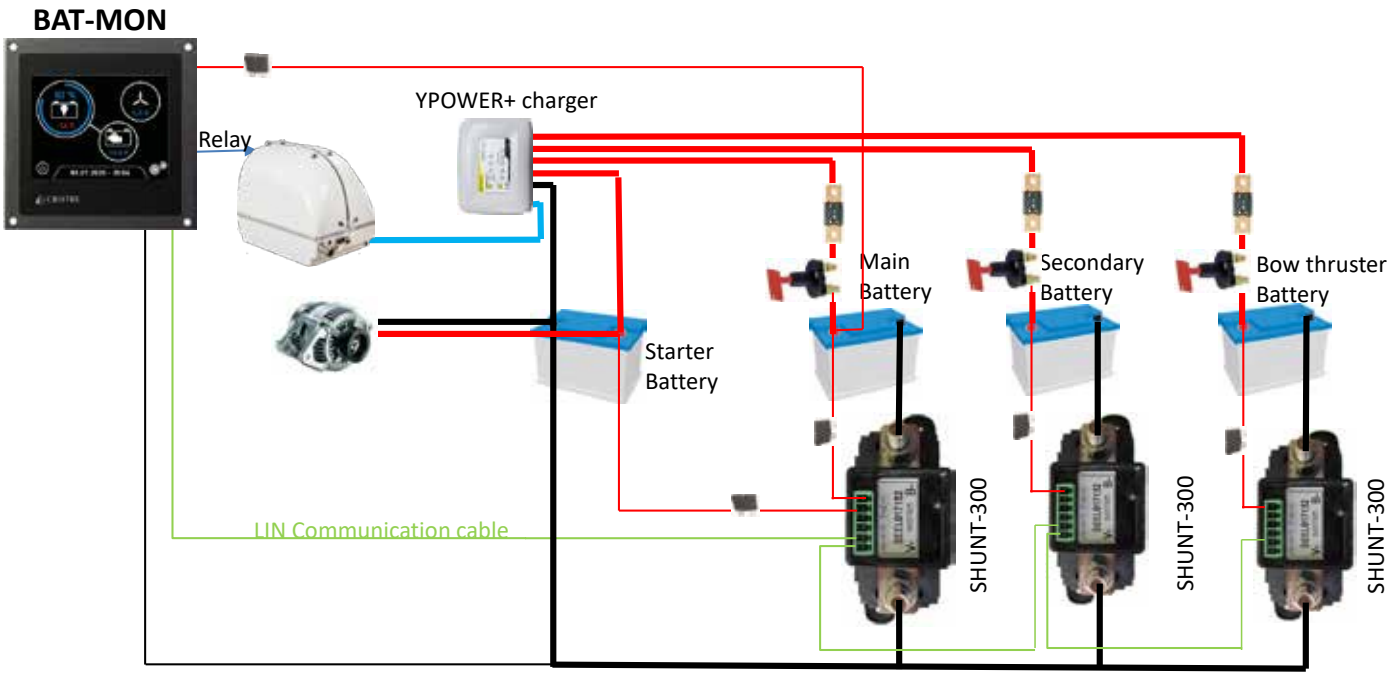

BAT-MON can monitor up to 5 batteries

Exemple of BAT-MON monitor integration on a DC switching panel.

FLEXCAN

Warranty 3 years

8.9/10 Repairability index

12V-24V

36V-48V

ENERGY MANAGEMENT

Presentation

With FLEXCAN shunt you are able to monitor on CAN-Bus your complete battery system and/or the current flow of DC energy sources such as solar panels. It can operate in two different modes.

In battery mode:

- voltage
- current
- temperature
- capacity and remaining autonomy time of the battery
- number of deep charge and discharge cycles
- voltage reading of an additional battery

In energy mode:

- Energy yield in Ampere hour to track current flow of energy sources such as alternators, solar cells or hydrogenerators

Part reference
SHUNT-300-CAN

Characteristics

- Voltage measurement range : from 8 to 64VDC
- Resolution: 30mV Accuracy : 0.25%
- Current load capacity : 300A, 600A 1 min, , 1500A 0.5 sec.
- Current measurement range : external sensor -15 to +60°C
- Resolution: 10mA - Accuracy : 0.5%
- Selection of the identifier by push button
- Possibility of using up to 16 shunts per network
- Dimensions : L 119 x l 43 x h 44 mm
- Connexion : M8 terminal
- Option : 2.8m STP-UNI-2.8 and 5m STP-UNI-5.0 temperature probe.

2 operating modes

If you want to monitor a battery, choose battery mode. For energy source tracking, select the energy mode.

Multi voltage

The **FLEXCAN** shunt is an autonomous device which, thanks to its integrated BUS-CAN interface, allows multi-voltage use: 12V, 24V, 36V or 48V up to 64V.

Lithium ready

The **FLEXCAN** shunt is compatible with all types of batteries including Lithium.

CAN-BUS interface*

The FLEXCAN shunt can be used in stand alone with an electrical appliance or with a screen.

(* compliant CAN-Bus on demand)

VLTG 70

Warranty 3 years

8.9/10 Repairability index

12V

24V

Presentation

The best solution to protect your battery against :

- Deep discharge
- Overvoltage
- Overload

The Battery guard protects your battery in order to increase its duration life. It provides a constant low voltage, overvoltage and overload protection.

When your battery reaches the pre-set low voltage the Battery guard will automatically disconnect the DC consumers. DC consumers will be switched on again automatically when battery voltage increases and when defined threshold is reached. The system will operate the same way for over-voltage. Low voltage threshold can be selected from external DIP switches. The over-voltage value is fixed.

The system can also be used as manual main switch. The output is turned off when the switch is closed. In this mode the Battery guard will only operate as battery low voltage protector.

The Battery guard has an integrated buzzer and LED to monitor its operating state. It is compliant with all Lead battery types : wet, sealed, gel, AGM, Calcium, except lithium.

Part reference
VLTG 70

Characteristics

- Rated current (constant) : 70 A
- Max current (10s @ 20°C) : 140 A
- Voltage : 12 and 24 VDC
- Input voltage range : 8 - 31 VDC
- Consumption : > 2mA (LED off)
- Presentation : plastic housing with external fixings - IP51
- Connection : on threaded rods
- Dimensions (l x h x d) : 100 x 89.2 x 43 mm
- Weight : 0.21 kg
- Operating temperature : from -10°C to +60°C
- 12V low voltage adjustment : 9 - 12 VDC
- 12V overvoltage threshold : 15.5 VDC
- 24V low voltage adjustment : 18 - 24 VDC
- 24V overvoltage threshold : 31 VDC

Installation

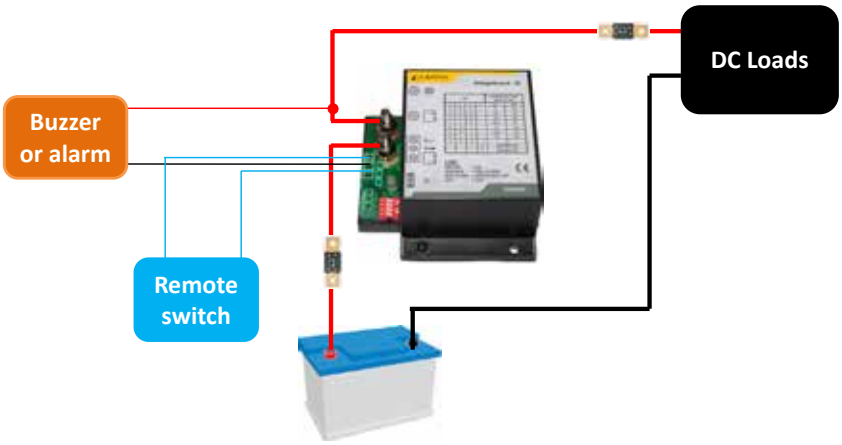

FREQ

Warranty 2 years

8.9/10 Repairability index

230VAC

Presentation

Frequency converters named FREQ are able to convert 50Hz into 60Hz or vice versa. They are perfectly fitted to installed devices that cannot cope with various frequency current like some refrigerators, computers, etc.

To choose a frequency converter, you must measure the inrush current of your device. Then increase this current by 50% in order to determine the model of FREQ that you need.

Part number	FREQ700	FREQ1000	FREQ1500	FREQ2200	FREQ3000
Power	700VA	1000VA	1500VA	2200VA	3000VA
Power with frequency conversion	490VA	700VA	1050VA	1540VA	2100VA
Input voltage tolerance	230 VAC +/-20%				
Input rated frequency	50Hz - 60Hz +/- 5%				
Input current distortion	<7%				
Output frequency	50Hz or 60Hz selectable				
Weight	12.5kg	14.9kg	15.5kg	28.8kg	31.2kg
Dimensions (WxDxH) mm	158x422x235mm			190x446x333mm	
Recommended temperature	0-40°C (104°F) (and preferably 20-25°C (68-77°F) for battery life)				

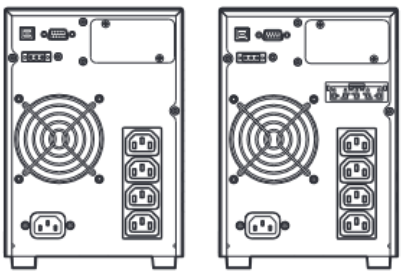

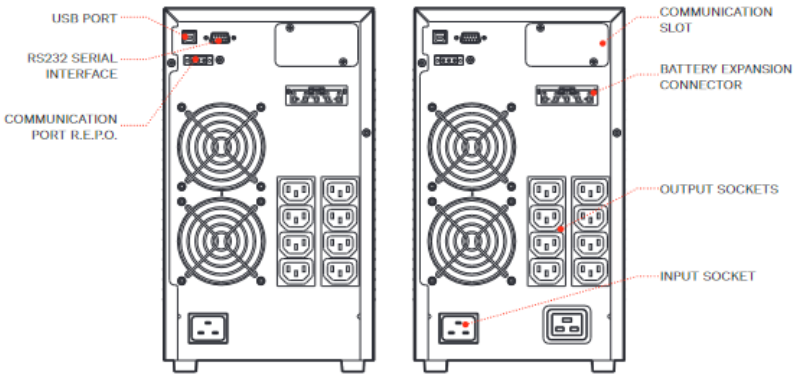

SAFEPOWER

Warranty 1 year

8.9/10 Repairability index

24V

Presentation

The Global Maritime Distress & Safety System (GMDSS) was developed by the International Maritime Organisation (IMO) to improve maritime distress and safety communications. It complies with the French regulations (Division 219 – October 2000) and for equipment installed on the Bridge with CEI 945 Standard.

SAFEPOWER Charger

The SAFEPOWER charger has proven itself to be an excellent battery charger and power supply for GMDSS applications.
It provide power from several available sources of energy to the radio system and the emergency communication system.
The power supplies integrate the following functions: connection, protection, display, warning and switchover.
The display can be remotely installed on a support close to the user.

With the configuration of 6 protected outputs, the system can power for example:
- 1 emitter MF
- 1 VHF ASN
- 1 VHF ASN (duplication)
- 1 Immarsat C
- 1 GPS
- 1 emergency light indicator

Part Number	SAFEPOWER1768
Input	
Input voltage	230 VAC 50Hz or 115 VAC 60Hz
Backup source	External service battery
Emergency source	External radio battery
Blocking Diode	Yes
Ouput	
Voltage	24VDC
Current	30A (60A on request)
Main functions	
Detection of over and under voltage.	Yes
Automatic switchover of the power supply sources	
DFC system – Automatic periodic testing of charging	
RAE system – Automatic Energy Search	
Warning console	Remote console : detection, Voltmeter & Ammeter
Environment	
Dimensions (L x W x H)	350 x 450 x 170 mm (13.8 x 17.7 x 6.7 in)
Weight	12 kg (26.5 lb)
Operating temperature	-10°C to 45°C (14 °F to 113°F)
Certification	
Marine certificate	BV N°10528

MOBILITY

Warranty 3 years

8.9/10 Repairability index

Presentation

Over the years CRISTEC has developed fanless AC-DC chargers and DC-DC converters. Thanks to this sophisticated technology, CRISTEC are able to design, integrate and deliver customized complete energy systems in IP67 waterproof hard casings that are watertight, airtight and crush resistant.

In case you have a need to fulfill, please contact us. info@cristec.fr

Example

We have manufactured a portable system that integrates two 24VDC lithium batteries that can be charged by an AC-DC charger located in a third waterproof case. In addition 2 DC converters deliver customized DC voltages to external equipment.

CRISTEC
on-board energy

23 ZA Penn ar Roz
29150 Châteaulin
FRANCE

Tel: +33 298 538 082
info@cristec.fr
www.cristec.fr

YOU ARE :

OEM, shipyard, boat-builder, electrician, dealer, distributor or experienced sailor ?

You need to design a robust electrical power system ?

SO, PLEASE CONTACT US !

We are offering you **FREE** design and advice to make your dream become a reality.

Tel : +33 298 538 082 **Mail : info@cristec.fr**

1983 Since

High-end products

In more than 50 countries